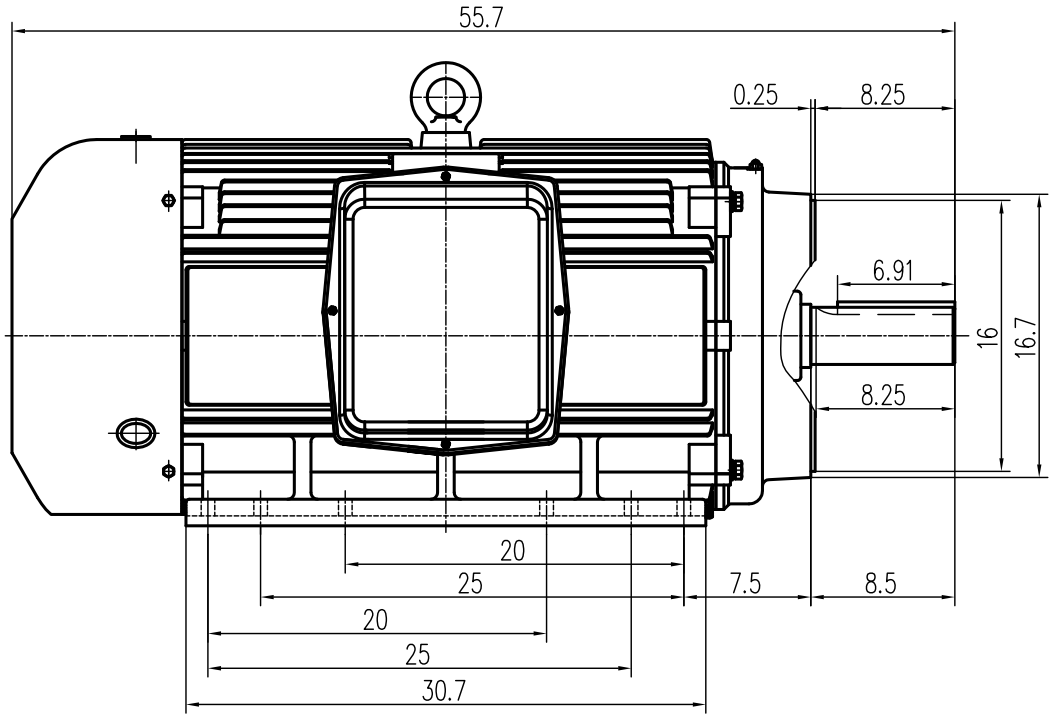

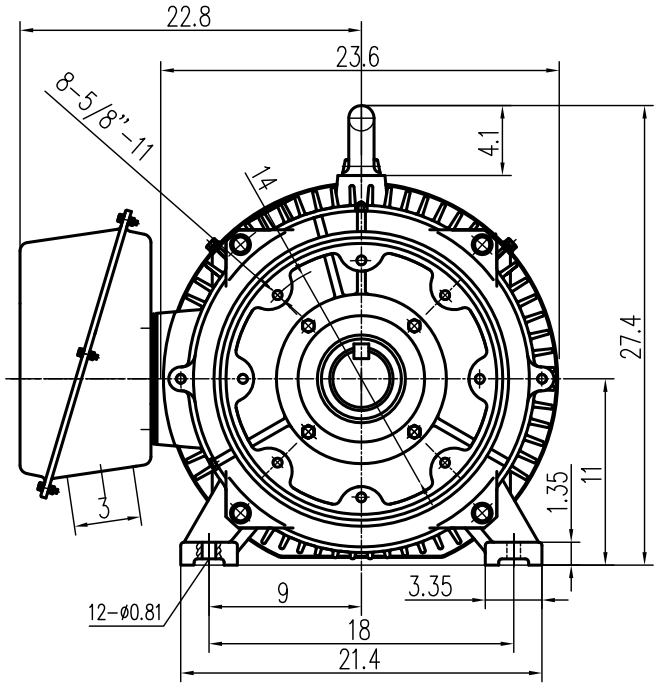

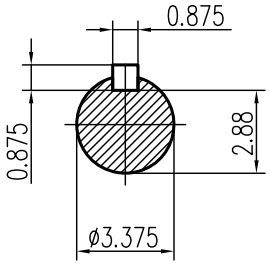

Mark	No.	Zone	Changed file No.	Signatuce	Date

Design			Standard		
Check					
Auditing					
Technics			approval		

Sign				Weight	Scale
					1:11
Total page			page No.		

TEFC 449TC-4 300HP
TEFC 449TC-6 250HP

OMEC MOTORS
MAKE THE WORLD MORE EFFICIENT
OUR MOTION IS YOUR PROFITS

OMEC NORTH AMERICA INC