让传动更高效

DRIVE EFFICIENTLY

OMEC MOTORS

无锡市惠山区阳山工业园区陆戴路8号
Add: No. 8, Ludai Road, Yangshan Industrial Park, Huishan District, Wuxi City
www.chinaomec.com 0510/8518 7858 sales@chinaomec.com

无锡欧瑞京机电有限公司

Wuxi Original Mechanical & Electrical Co.,Ltd.

OMEC MOTORS

OMEC MOTORS

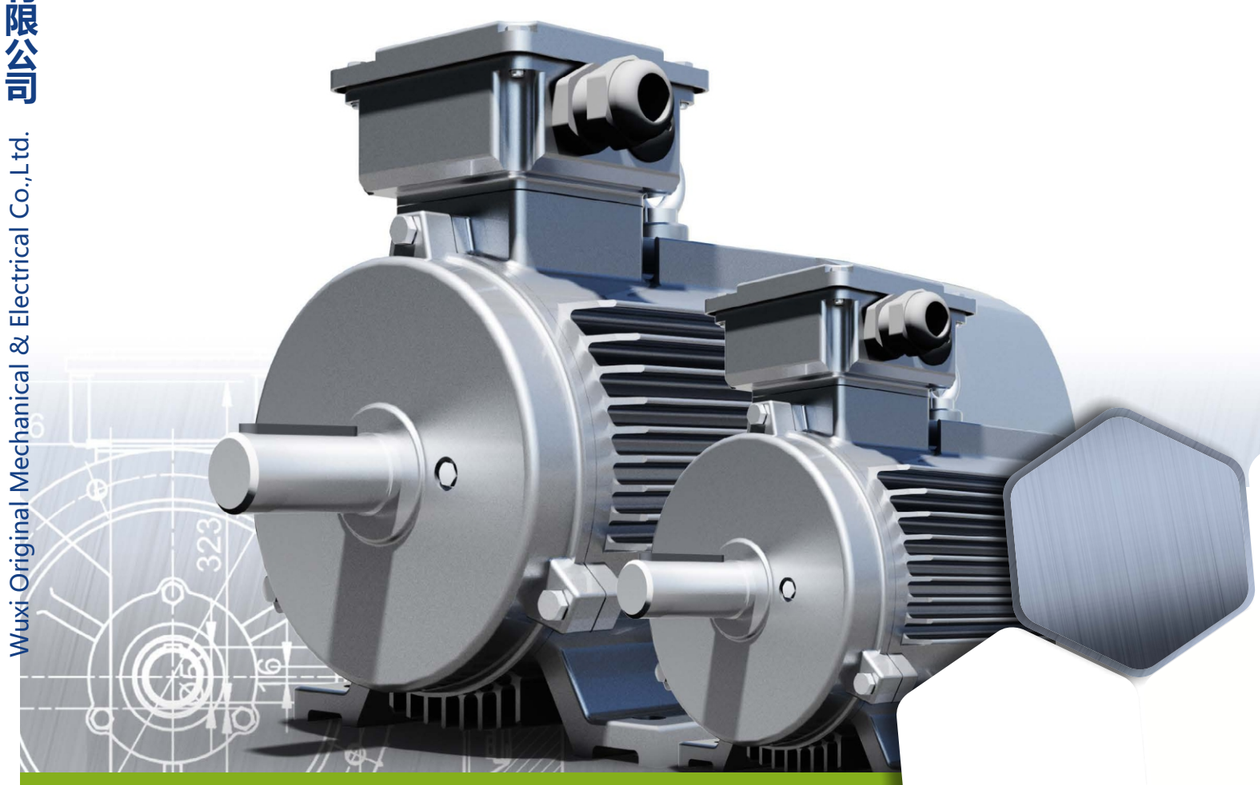

无锡欧瑞京机电有限公司
无锡欧瑞京电机有限公司

Wuxi Original Mechanical & Electrical Co.,Ltd.

OMEC MOTORS

无锡欧瑞京机电有限公司（以下简称"公司"）是由近百年电机技术积累的荷兰PEJA集团在华投资建设的合资公司，地处风景秀丽、工业发达的惠山区，紧邻上海、苏州、南京等城市。公司成立于2010年4月6日，注册资本10000万元，占地面积65亩，厂房约40000平米。公司立足于科技进步与人才战略，引入业内资深技术人员和管理团队，现有职工380人，其中中高级工程技术人员40余人。公司主要产品是高效、超高效的高、低压电机，永磁同步电机以及变频、制动、水冷、空空冷却、绕线型转子等特种电机；同时为客户提供包括各类电机、变频器、联轴器、减速箱等在内的专业传动解决方案。

让传动更高效

我们拥有自己的制造、分销、
研发和客户服务团队，
为客户提供专业可靠的传动解决方案。

DRIVE EFFICIENTLY

We have our own manufacturing, distribution, R&D and customer service teams to provide customers with professional and reliable transmission solutions.

目录
TABLE OF CONTENTS

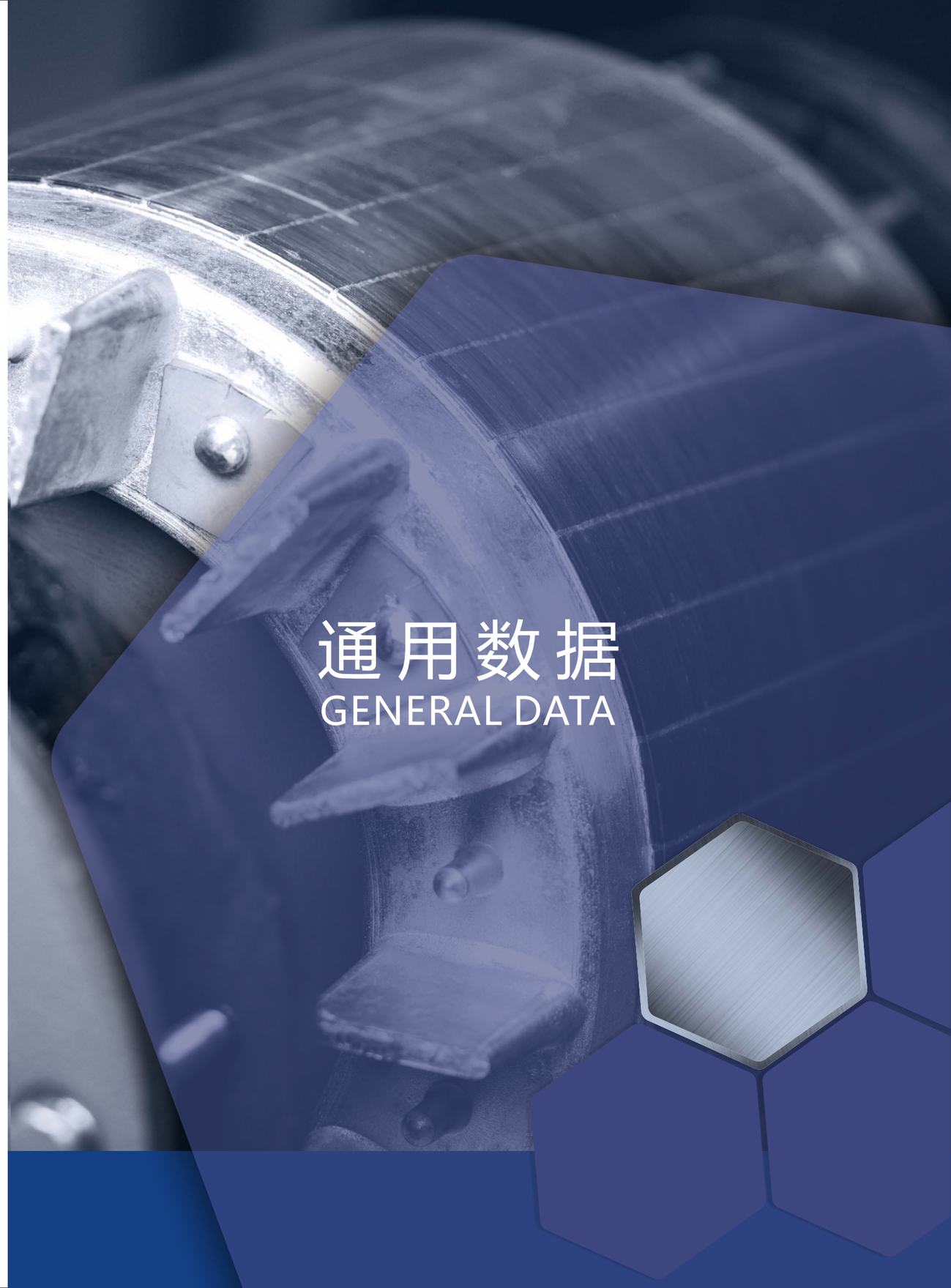

通用数据
GENERAL DATA

安装结构型式
MOUNTING CONSTRUCTION

底脚 Feet

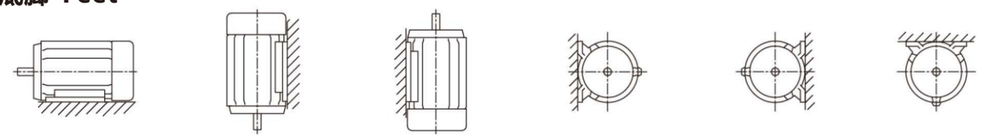

B3(IM1001) (H63~355) | V5(IM1011) (H63~280) | V6(IM1031) (H63~280) | B6(IM1051) (H63~280) | B7(IM1061) (H63~280) | B8(IM1071) (H63~280)

大法兰 Large Flange

大法兰和底脚 Large Flange and Feet

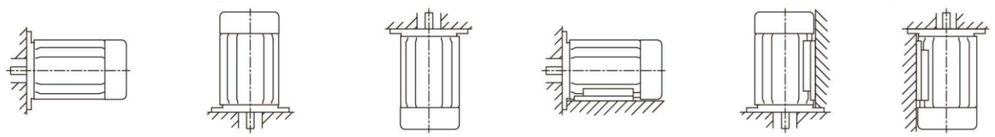

B5(IM3001) (H63~280) | V1(IM3011) (H63~355) | V3(IM3031) (H63~280) | B35(IM2001) (H63~355) | V15(IM2011) (H63~280) | V36(IM2031) (H63~280)

小法兰 Small Flange

小法兰（面）和底脚 Small Flange(face)and Feet

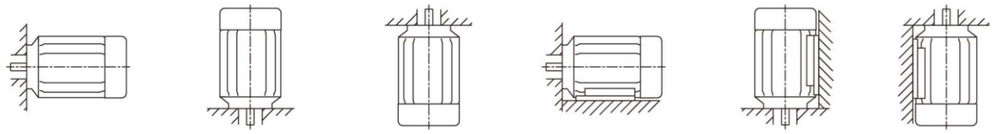

B14(Im3601) (H63~160) | V18(Im3611) (H63~160) | V19(Im3631) (H63~160) | B34(Im2101) (H63~160) | Im2111 (H63~160) | Im2131 (H63~160)

以下轴承型号和机械特性数据仅供参考，欧瑞京在技术改型或产品派生时，可能进行设计变更。
As part of development program, OMEC may change or amend the specification without prior notice.

轴承型号 适用于低压标准系列电机
BEARING SPECIFICATIONGS (Low Voltage Motor)

机座号 Frame Size	极 数 Pole	驱动端轴承 Drive-end Bearing		非驱动端轴承 Non-drive-end Bearing	
		水平安装 Horizontal Mounting	垂直安装 Vertical Mounting	水平安装 Horizontal Mounting	垂直安装 Vertical Mounting
80	2、4、6、8	6204ZZ		6204ZZ	
90	2、4、6、8	6205ZZ		6205ZZ	
100	2、4、6、8	6206ZZC3		6206ZZC3	
112	2、4、6、8	6306ZZC3		6306ZZC3	
132	2、4、6、8	6308ZZC3		6308ZZC3	
160	2、4、6、8	6309ZZC3		6309ZZC3	
180	2、4、6、8	6311C3		6311C3	
200	2、4、6、8	6312C3		6312C3	
225	2、4、6、8	6313C3		6313C3	
250	2、4、6、8	6314C3		6314C3	
280	2	6314C3		6314C3	
	4、6、8	6317C3		6317C3	
315	2	6317C3		6317C3	
	4、6、8	6319C3		6319C3	
355	2	6317C3		6317C3	
	4、6、8	6322C3		6320C3	
315X	2	6218C3		6218C3	
	4、6、8	6319C3		6319C3	
355X	2	6220C3		6220C3	
	4、6、8	6322C3		6222C3	
400X	2	6220C3		6220C3	
	4、6、8	6326C3		6326C3	
450X	2	6221C3		6221C3	无产品/Null
	4、6、8	6328C3		6328C3	7328B
500X	4、6、8	6330C3		6330C3	7330B
560X	4、6、8	6334C3		6330C3	7330B

适用于高压标准系列电机 MEDIUM & HIGH VOLTAGE MOTOR

机座号 Frame Size	极 数 Pole	驱动端轴承 Drive-end Bearing		非驱动端轴承 Non-drive-end Bearing	
		水平安装 Horizontal Mounting	垂直安装 Vertical Mounting	水平安装 Horizontal Mounting	垂直安装 Vertical Mounting
355	2	6218C3		6218C3	
	4,6,8	6322C3		6322C3	6322C3 (7322B)
400	2	6220C3	无产品/Null	6220C3	无产品/Null
	4,6,8	6326C3		6326C3	6326C3 (7326B)
450	2	6220C3	无产品/Null	6220C3	无产品/Null
	4,6,8	6328C3		6328C3	6328C3 (7328B)
500	2	滑动轴承/Sleeve Bearing	无产品/Null	滑动轴承/Sleeve Bearing	无产品/Null
	4	6328C3		6328C3	7328B
	6,8	6330C3		6328C3	7328B
	6,8 (10KV)	6328C3		6328C3	7328B
560	2	滑动轴承/Sleeve Bearing	无产品/Null	滑动轴承/Sleeve Bearing	无产品/Null
	4,6,8	6334C3		6330C3	7330B

机械特性
MECHANICAL FEATURES

电动机接线盒

电机接线盒的位置默认为顶端，同时接线盒自身可旋转4×90°安装。

Conduit Box

Conduit boxes are top mou 4x90° to allow for cable ent.

机座号 Frame Size	防护等级 Protection Degree	接线盒的转向 Rotation Of Conduit BoX	引出线孔的数目 Number Of Cable Grand	接线端子螺丝 Terminal Bus	引出线螺套的尺寸 Cable Entry Size	长×宽×高 L X W X H (mm)
80-100	IP55	4x90°	2	M4	2-M25×1.5	110×110×65
112-132	IP55	4x90°	2	M5	2-M32×1.5	125×125×80
160-180	IP55	4x90°	2	M6	2-M40×1.5	170×160×90
200-225	IP55	4x90°	2	M8	2-M50×1.5	215×200×110
250-280	IP55	4x90°	2	M10	2-M63×1.5	230×230×130
315	IP55	4x90°	2	M12	2-M63×1.5	305×305×170
355	IP55	4x90°	2	M16	2-M72×2	390×345×210
315X	IP55	4x90°	9	M16	7-M40×1.5+2-M16×1.5	369×369×167
355X-400X	IP55	4x90°	7	M16	7-M63×1.5	440×440×265
450X-560X	IP55	4x90°	7	M16	7-M63×1.5	615×560×295

如订购其他振动等级的电机，请在技术要求中特别注明。
Other vibration grade are available on request.

振动
VIBRATION

所有电机转子都使用半键按照A级（标准）振动等级进行动态平衡。
电机在空载时测得振动速度有效值不超过下表中的A级所列值。

Motor rotors are dynamically balanced to severity grade Ausing a halfkey.
Table below contains the effective vibration values for unloadedmotors .

振动等级 Vibration Grade	机座号 Frame Size (mm)	H56~H132	H160~H280	H315~H355
A	安装方式 Mounting	振动速度(mm/s) Vibration Velocity	振动速度(mm/s) Vibration Velocity	振动速度(mm/s) Vibration Velocity
	自由悬置 Free Suspension	1.6	2.2	2.8
	刚性安装 Rigid Mounting	1.3	1.8	2.3

参考标准
REFERENCE STANDARDS

低压标准系列电机符合下面的电气和机械标准:

LV motor series comply with the following electrical and mechanical standards:

名称 Title	IEC标准 IEC standard	中国国家标准 Chinese standard
旋转电动机定额和性能 Rotating electrical machines-Part 1:Rating and performance	IEC 60034-1	GB 755
旋转电动机损耗与效率确定的标准测试方法 Rotating electrical machines-Part 2-1:Standaed methods for determininglosses and efficiency from tests(excluding machines for traction vehicles)	IEC 60034-2	GB/T 1032
旋转电机整体结构的防护等级（IP代码）分级 Rotating electrical machines-Part 5 : Degrees of protection provided by theintegral design of rotating electrical machines(IP code) -Classification	IEC 60034-5	GB/T 4942.1
旋转电动机冷却方法 Rotating electrical machines-Part6 : Methods of cooling (IC Code)	IEC 60034-6	GB/T 1993
旋转电动机结构型式、安装型式及接线盒位置的分类(IM代码) Rotating electrical machines-Part7 : Classification of types of construction, mounting arrangements and terminal box position (IM Code)	IEC 60034-7	GB/T 997
旋转电动机旋转电机线端标志与旋转方向 Rotating electrical machines-Part8 : Terminal markings and direction ofrotation	IEC 60034-8	GB/T 1971
旋转电机噪声测定方法及限值 第9部分：噪声限值 Rotating electrical machines-Part9 : Noise limits	IEC 60034-9	GB 10069.3
轴中心高为56mm及以上电机的机械振动 振动的测量、评定及限值 Rotating electrical machines-Part14 : Mechanical vibration of certainmachines with shaft heights 56 mm and higher-Measurement ,evaluationand limits of vibration severity	IEC 60034-14	GB 10068
旋转电机尺寸和输出功率等级 第1部分：机座号56~400和凸缘号55~1080 Rotating electrical machines-Part1 : Frame numbers 56 to 400 and flangenumbers 55 to 1080	IEC 60072-1	GB/T 4772.1
中小型旋转电机安全要求 Safety requirments of samll and medium size rotating electrical machines		GB 14711
旋转电动机温升 Electrical insulation-Thermal classification	IEC 60085	GB/T 11021
电工电子产品自然环境条件 温度和湿度 Classification of environmental conditions Part 2-1 : Environmental conditionsappearing in nature-Temperature and humidity	IEC 60072-2-1	GB/T 4797.1
标准电压 Standard voltages	IEC 60038	GB/T 156

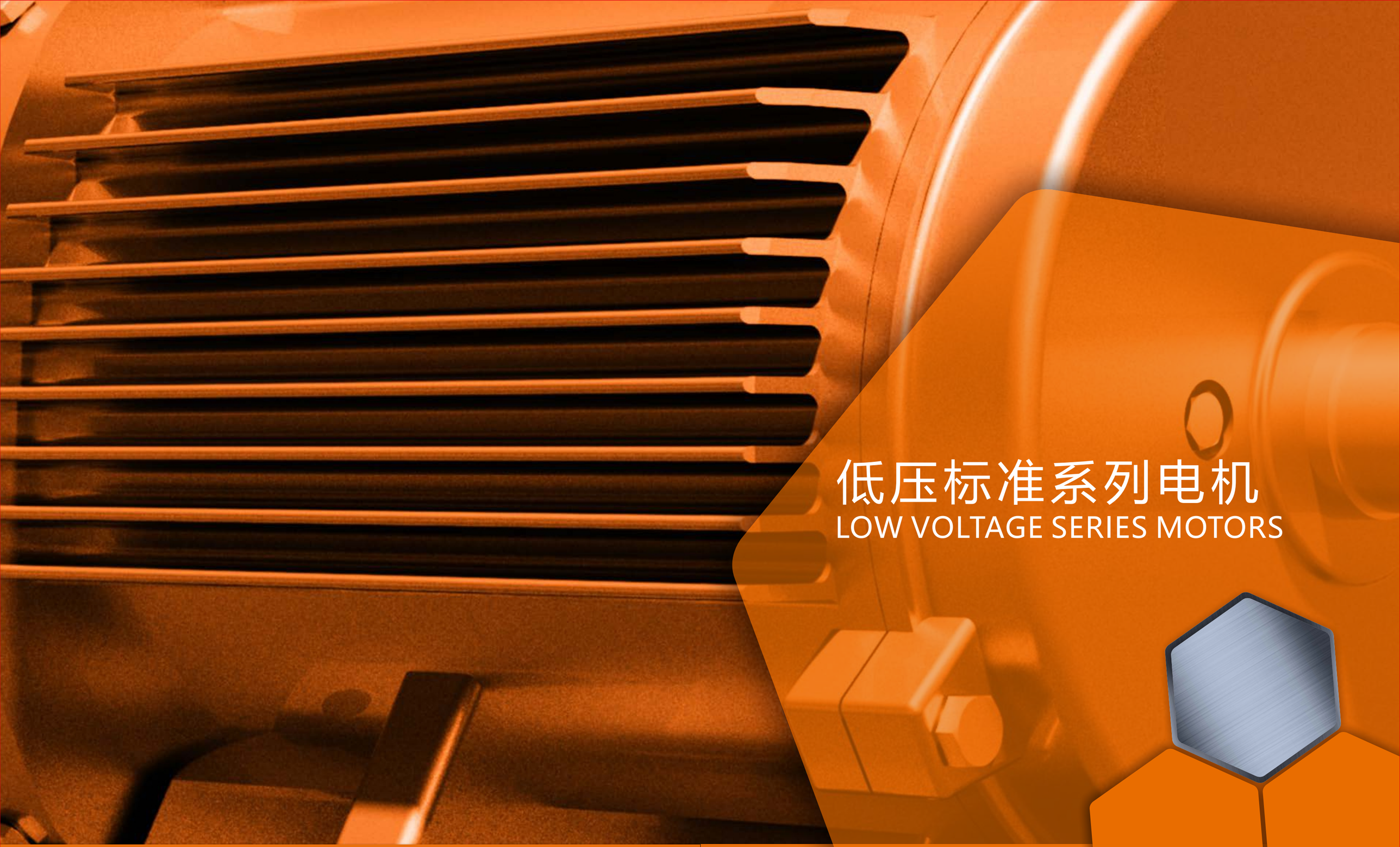

低压标准系列电机

LOW VOLTAGE SERIES MOTORS

OMT3系列（IP55）三相异步电动机

IE3 (CHINESE GRADE 3)

功率范围（Power）：0.75-355KW；
机座范围（Frame）：H80-355。

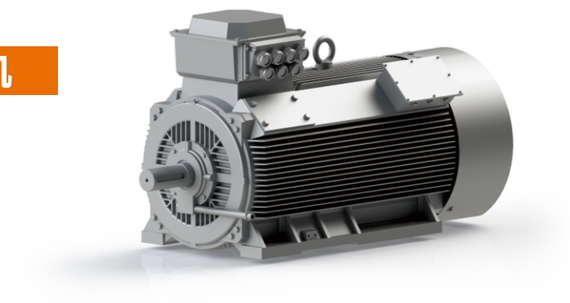

基本技术要求及特点

- 全封闭自扇冷却式三相异步电动机，设计符合IEC、GB等相关标准要求；
- 外壳材料全部为灰铸铁；
- 电动机效率符合GB18613-2020标准能效等级三级及IEC60034-30标准的IE4效率等级要求；
- 特定绕组设计，支持多种电压(50HZ或60HZ)；
- 可承受1.5倍额定电流2分钟(IEC60034-1)；
- 可选配防潮加热带(空间加热器)；
- 可选配PTC或PT100等热敏元件进行绕组或轴承热保护。

Technical characteristics

- Totally enclosed fan-cooled three-phase asynchronous motor designed according to IEC,GB and relevant standards;
- Housings made of gray cast iron;
- Efficiency value meets the grade 3 efficiency in GB18613-2020 and IE4 efficiency in IEC60034-30;
- Special winding design support multiple voltages (50HZ or 60HZ);
- Withstand 1.5 times rated current for 2 minutes (IEC60034-1);
- Optional heater for moisture-proof;
- PTC or PT100 selected for thermal protection of windings or bearings.

产品优势

- **效率提高**
  通过新型的绕组设计，采用低损耗硅钢材料及先进制造工艺，减少电机损耗,提高电能转换效率，为客户提高经济效益，并有效减少能源使用,保护环境；
- **质量、性能提升**
  为确保良好的绝缘性能，增加电机使用寿命，标准电机采用F级绝缘系统并按B级考核(80K)；
- **电压、效率**
  标准电机的供电电压和频率符合IEC60034-1标准中规定的A类电压和频率误差要求，允许电压偏差为±5%，频率偏差±2%；
- **额定输出**
  根据IEC60034-1标准要求，在额定电压和频率下能承受1.5倍额定电流持续2分钟。

Product advantages

- **Efficiency improvement**
  New winding design,low loss silicon steel sheets and advanced manufacture process applied to decrease the motors loss and improve the efficiency.
- **Reliable quality and superior characteristics**
  To insure the good insulation and extend the lifetime, standard motors are according to F/B.
- **Voltage, efficiency**
  According to Class A voltage and frequency tolerance demands in IEC60034-1 standard, the motor's voltage tolerance is ±5%,and the frequency tolerance is±2%.
- **Rated output**
  According to IEC60034-1 standard, it can withstand 1.5 times rated current for 2 minutes under rated voltage and frequency.

OMT3系列（IP55）三相异步电动机

IE3 (CHINESE GRADE 3)

产品的电气性能数据（Technical Date）

电机型号 Motor Type	功率 Rated Power		额定转速 Rated Speed	效率 Efficiency	功率因数 Power Factor	电流 Current			转矩 Torque		转动惯量 Moment of inertia(J)	重量 Approx WT
						Full Load 400V	Full Load 690V	Locked Rotor	Locked Rotor	Pull Out		
	KW	(HP)	RPM	%		A	A	FLC	FLT	FLT	Kg-m²	Kg
OMT3-080M1-02P	0.75	1	2850	80.7	0.82	1.6	—	7	2.3	2.3	0.0009	17
OMT3-080M2-02P	1.1	1.5	2860	82.7	0.83	2.3	—	7.6	2.2	2.3	0.0011	18
OMT3-080M2-04P	0.75	1	1435	82.5	0.75	1.7	—	6.6	2.3	2.3	0.0015	19
OMT3-090S0-02P	1.5	2	2870	84.2	0.84	3.1	—	7.9	2.2	2.3	0.0013	25
OMT3-090L0-02P	2.2	3	2880	85.9	0.85	4.3	—	7.9	2.2	2.3	0.0018	27
OMT3-090S0-04P	1.1	1.5	1420	84.1	0.76	2.5	—	6.8	2.3	2.3	0.0025	35
OMT3-090L0-04P	1.5	2	1415	85.3	0.77	3.3	—	7	2.3	2.3	0.0031	37
OMT3-090S0-06P	0.75	1	925	78.9	0.71	1.9	—	6	2.0	2.1	0.0033	27
OMT3-090L0-06P	1.1	1.5	930	81.0	0.73	2.7	—	6	2.0	2.1	0.0044	30
OMT3-100L0-02P	3	4	2870	87.1	0.87	5.7	—	8.5	2.2	2.3	0.0039	40
OMT3-100L1-04P	2.2	3	1450	86.7	0.81	4.5	—	7.6	2.3	2.3	0.0067	44
OMT3-100L2-04P	3	4	1450	87.7	0.82	6.0	—	7.6	2.3	2.3	0.0082	47
OMT3-100L0-06P	1.5	2	960	82.5	0.73	3.6	—	6.5	2.0	2.1	0.0101	43
OMT3-112M0-02P	4	5.5	2900	88.1	0.88	7.4	4.3	8.5	2.2	2.3	0.0056	49
OMT3-112M0-04P	4	5.5	1445	88.6	0.82	7.9	4.6	7.8	2.2	2.3	0.0117	54
OMT3-112M0-06P	2.2	3	955	84.3	0.74	5.1	—	6.6	2.0	2.1	0.0160	39
OMT3-112M0-08P	1.5	2	700	79.7	0.70	3.9	—	5	1.8	2.0	0.0133	39
OMT3-132S1-02P	5.5	7.5	2890	89.2	0.88	10.1	5.9	8.5	2.0	2.3	0.0125	66
OMT3-132S2-02P	7.5	10	2895	90.1	0.88	13.7	7.9	8.5	2.0	2.3	0.0147	72
OMT3-132S0-04P	5.5	7.5	1455	89.6	0.83	10.7	6.2	7.9	2.0	2.3	0.0249	67
OMT3-132M0-04P	7.5	10	1450	90.4	0.84	14.3	8.3	7.5	2.0	2.3	0.0311	79
OMT3-132S0-06P	3	4	960	85.6	0.74	6.8	—	6.8	2.0	2.1	0.0316	73
OMT3-132M1-06P	4	5.5	970	86.8	0.74	9.0	5.2	6.8	2.0	2.1	0.0417	74
OMT3-132M2-06P	5.5	7.5	970	88.0	0.75	12.0	7.0	7	2.0	2.1	0.0517	89
OMT3-132S0-08P	2.2	3	715	81.9	0.71	6.1	3.2	6	1.8	2.0	0.0290	62
OMT3-132M0-08P	3	4	715	83.5	0.73	7.1	4.1	6	1.8	2.0	0.0382	66
OMT3-160M1-02P	11	15	2930	91.2	0.89	19.6	11.3	8.5	2.0	2.3	0.0421	106
OMT3-160M2-02P	15	20	2920	91.9	0.89	26.5	15.3	8.5	2.0	2.3	0.0535	115
OMT3-160L0-02P	18.5	25	2920	92.4	0.89	32.5	18.8	8.5	2.0	2.3	0.0615	131
OMT3-160M0-04P	11	15	1465	91.4	0.85	20.4	11.8	7.7	2.2	2.3	0.0841	114
OMT3-160L0-04P	15	20	1465	92.1	0.86	27.3	15.8	7.8	2.2	2.3	0.1135	140
OMT3-160M0-06P	7.5	10	960	89.1	0.79	15.4	8.9	7.0	2.0	2.1	0.0910	104
OMT3-160L0-06P	11	15	965	90.3	0.80	22.0	12.7	7.2	2.0	2.1	0.1302	130

OMT3系列(IP55)三相异步电动机
IE3 (CHINESE GRADE 3)

产品的电气性能数据(Technical Date)

电机型号 Motor Type	功率 Rated Power		额定转速 Rated Speed	效率 Efficiency	功率因数 Power Factor	电流 Current			转矩 Torque		转动惯量 Moment of inertia(J)	重量 Approx WT
						Full Load 400V	Full Load 690V	Locked Rotor	Locked Rotor	Pull Out		
	KW	(HP)	RPM	%		A	A	FLC	FLT	FLT	Kg-m²	Kg
OMT3-160M1-08P	4	5.5	715	84.8	0.73	9.3	5.4	6	1.9	2.0	0.0650	94
OMT3-160M2-08P	5.5	7.5	720	86.2	0.74	12.4	7.2	6	1.9	2.0	0.0880	106
OMT3-160L0-08P	7.5	10	720	87.3	0.75	16.5	9.6	6	1.9	2.0	0.1229	128
OMT3-180M0-02P	22	30	2940	92.7	0.89	38.5	22.3	8.5	2.0	2.3	0.0969	174
OMT3-180M0-04P	18.5	25	1465	92.6	0.86	33.5	19.4	7.8	2.0	2.3	0.1537	176
OMT3-180L0-04P	22	30	1465	93.0	0.86	39.7	23.0	7.8	2.0	2.3	0.1842	192
OMT3-180L0-06P	15	20	975	91.2	0.81	29.3	17.0	7.3	2.0	2.1	0.2286	176
OMT3-180L0-08P	11	15	725	88.6	0.75	23.9	13.9	6.6	2.0	2.0	0.2059	170
OMT3-200L1-02P	30	40	2950	93.3	0.89	52.1	30.2	8.5	2.0	2.3	0.1464	230
OMT3-200L2-02P	37	50	2950	93.7	0.89	64.0	37.1	8.5	2.0	2.3	0.1735	248
OMT3-200L0-04P	30	40	1465	93.6	0.86	53.8	31.2	7.3	2.0	2.3	0.2852	249
OMT3-200L1-06P	18.5	25	975	91.7	0.81	36.0	20.8	7.3	2.0	2.1	0.3428	224
OMT3-200L2-06P	22	30	975	92.2	0.81	42.5	24.6	7.4	2.0	2.1	0.4139	244
OMT3-200L0-08P	15	20	730	89.6	0.76	31.8	18.4	6.6	2.0	2.0	0.3250	230
OMT3-225M0-02P	45	60	2960	94.0	0.90	76.8	44.5	8	2.0	2.3	0.2684	299
OMT3-225S0-04P	37	50	1475	93.9	0.86	66.1	38.3	7.4	2.0	2.3	0.5006	298
OMT3-225M0-04P	45	60	1475	94.2	0.86	80.2	46.5	7.4	2.0	2.3	0.5920	326
OMT3-225M0-06P	30	40	980	92.9	0.83	56.2	32.6	6.9	2.0	2.1	0.5948	296
OMT3-225S0-08P	18.5	25	730	90.1	0.76	39.0	22.6	6.6	1.9	2.0	0.5380	272
OMT3-225M0-08P	22	30	730	90.6	0.78	44.9	26.0	6.6	1.9	2.0	0.6290	294
OMT3-250M0-02P	55	75	2960	94.3	0.90	93.5	54.2	8	2.0	2.3	0.3543	391
OMT3-250M0-04P	55	75	1475	94.6	0.86	97.6	56.6	7.4	2.2	2.3	0.6841	393
OMT3-250M0-06P	37	50	980	93.3	0.84	68.6	39.7	7.1	2.0	2.1	0.9089	383
OMT3-250M0-08P	30	40	735	91.3	0.79	60.0	34.8	6.6	1.9	2.0	0.8090	370
OMT3-280S0-02P	75	100	2965	94.7	0.90	127.0	73.6	7.5	1.8	2.3	0.6632	544
OMT3-280M0-02P	90	120	2965	95.0	0.90	151.9	88.1	7.5	1.8	2.3	0.7560	591
OMT3-280S0-04P	75	100	1480	95.0	0.88	129.5	75.1	6.9	2.0	2.3	1.3885	576
OMT3-280M0-04P	90	120	1480	95.2	0.88	155.1	89.9	6.9	2.0	2.3	1.6833	658
OMT3-280S0-06P	45	60	980	93.7	0.85	81.6	47.3	7.3	2.0	2.0	1.6704	531
OMT3-280M0-06P	55	75	980	94.1	0.86	98.1	56.9	7.3	2.0	2.0	2.0295	601
OMT3-280S0-08P	37	50	735	91.8	0.79	73.6	42.7	6.6	1.9	2.0	1.5470	475
OMT3-280M0-08P	45	60	735	92.2	0.79	89.2	51.7	6.6	1.9	2.0	1.8570	555
OMT3-315S0-02P	110	145	2975	95.2	0.90	185.3	107.4	7.5	1.8	2.3	1.2523	819

OMT3系列(IP55)三相异步电动机
IE3 (CHINESE GRADE 3)

产品的电气性能数据(Technical Date)

电机型号 Motor Type	功率 Rated Power		额定转速 Rated Speed	效率 Efficiency	功率因数 Power Factor	电流 Current			转矩 Torque		转动惯量 Moment of inertia(J)	重量 Approx WT
						Full Load 400V	Full Load 690V	Locked Rotor	Locked Rotor	Pull Out		
	KW	(HP)	RPM	%		A	A	FLC	FLT	FLT	Kg-m²	Kg
OMT3-315M0-02P	132	175	2975	95.4	0.90	221.9	128.6	7.5	1.8	2.3	1.3942	934
OMT3-315L1-02P	160	215	2975	95.6	0.91	265.5	153.9	7.5	1.8	2.3	1.5361	1009
OMT3-315L2-02P	200	270	2975	95.8	0.91	332.6	192.8	7.5	1.8	2.2	1.9146	1084
OMT3-315S0-04P	110	145	1480	95.4	0.89	187.0	108.4	7.0	2.0	2.2	2.7112	854
OMT3-315M0-04P	132	175	1480	95.6	0.89	223.9	129.8	7	2.0	2.2	3.0065	934
OMT3-315L1-04P	160	215	1480	95.8	0.89	270.9	157.0	7.1	2.0	2.2	3.7518	999
OMT3-315L2-04P	200	270	1480	96.0	0.90	334.1	193.7	7.1	2.0	2.2	4.6978	1194
OMT3-315S0-06P	75	100	980	94.6	0.84	136.2	79.0	6.6	2.0	2.0	2.9249	744
OMT3-315M0-06P	90	120	980	94.9	0.85	161.0	93.4	6.7	2.0	2.0	3.4551	854
OMT3-315L1-06P	110	145	980	95.1	0.85	196.4	113.9	6.7	2.0	2.0	4.3925	1014
OMT3-315L2-06P	132	175	980	95.4	0.86	232.2	134.6	6.8	2.0	2.0	5.3503	1084
OMT3-315S0-08P	55	75	740	92.5	0.81	106.0	61.4	6.6	1.8	2.0	3.6820	905
OMT3-315M0-08P	75	100	740	93.1	0.81	143.6	83.2	6.6	1.8	2.0	4.9590	981
OMT3-315L1-08P	90	120	740	93.4	0.82	169.6	98.3	6.6	1.8	2.0	5.8250	1071
OMT3-315L2-08P	110	150	740	93.7	0.82	206.6	119.8	6.4	1.8	2.0	6.7530	1160
OMT3-355M0-02P	250	335	2975	95.8	0.91	412.1	238.9	7.5	1.6	2.2	2.8042	1625
OMT3-355L1-02P	280	375	2975	95.8	0.91	463.6	268.8	7.5	1.6	2.2	2.8042	1625
OMT3-355L2-02P	315	420	2975	95.8	0.91	521.5	302.3	7.5	1.6	2.2	3.2565	1750
OMT3-355L3-02P	355	475	2975	95.8	0.91	587.8	340.7	7.5	1.6	2.2	3.2565	1800
OMT3-355M0-04P	250	335	1485	96.0	0.90	417.7	242.1	7.1	2.0	2.2	7.3160	1625
OMT3-355L1-04P	280	375	1485	96.0	0.90	467.8	271.2	7.1	2.0	2.2	7.3160	1625
OMT3-355L2-04P	315	420	1485	96.0	0.90	526.2	305.1	7.1	2.0	2.2	8.0550	1700
OMT3-355L3-04P	355	475	1485	96.0	0.90	593.1	343.8	7.1	2.0	2.2	8.9863	1865
OMT3-355M1-06P	160	215	990	95.6	0.86	280.9	162.8	6.8	1.8	2.0	7.7455	1600
OMT3-355M2-06P	185	250	990	95.8	0.86	324.1	187.9	6.8	1.8	2.0	9.2033	1650
OMT3-355M3-06P	200	270	990	95.8	0.87	346.4	200.8	6.8	1.8	2.0	9.2033	1720
OMT3-355L1-06P	220	300	990	95.8	0.87	381.0	220.9	6.8	1.8	2.0	10.2967	1760
OMT3-355L2-06P	250	335	990	95.8	0.87	433.0	251.0	6.8	1.8	2.0	10.2967	1820
OMT3-355L3-06P	280	375	990	95.8	0.87	484.9	281.1	6.8	1.8	2.0	10.8434	1900
OMT3-355M1-08P	132	180	745	94	0.82	247.2	143.3	6.4	1.8	2.0	12.9	1800
OMT3-355M2-08P	160	215	745	94.3	0.82	298.7	173.1	6.4	1.8	2.0	14.3	1890
OMT3-355L1-08P	180	240	745	94.5	0.82	335.3	194.4	6.4	1.8	2.0	15	1970
OMT3-355L2-08P	200	270	745	94.6	0.83	367.7	213.1	6.4	1.8	2.0	15.9	2040

OMT3系列(IP55)三相异步电动机
IE3 (CHINESE GRADE 3)

机械尺寸数据(Outline&Installation Dimensions) B3

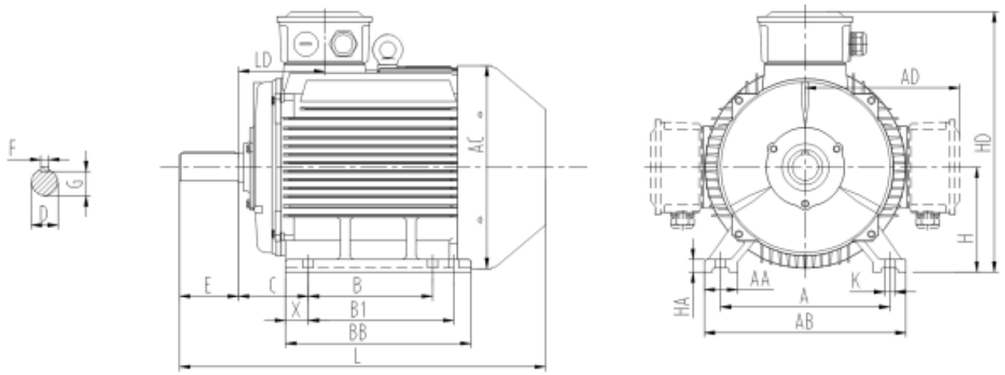

机座号 Frame Size	极 数 Pole	安装尺寸 Installation Dimensions											外形尺寸 Outline Dimensions									
		A	B	B1	C	D	E	F	G	H	K	X	AA	AB	AC	AD	BB	HA	HD 上出线 Top	HD 旁出线 Left/Right	LD	L
80	2-6	125	100	—	50	19	40	6	15.5	80	10	14	34	160	176	160	130	10	235	175	76	305
90S	2-6	140	100	—	56	24	50	8	20	90	10	20	36	180	176	165	180	12	245	180	75	355
90L	2-6	140	125	—	56	24	50	8	20	90	10	20	36	180	176	165	210	12	245	180	75	385
100L	2-6	160	140	—	63	28	60	8	24	100	12	18	40	200	206	180	235	14	275	250	83	435
112M	2-6	190	140	—	70	28	60	8	24	112	12	20	45	230	220	200	180	15	310	265	87	410
132S	2-6	216	140	—	89	38	80	10	33	132	12	23	55	265	260	215	190	18	350	315	102	475
132M	2-6	216	178	—	89	38	80	10	33	132	12	23	55	265	260	215	225	18	350	315	102	515
160M	2-6	254	210	—	108	42	110	12	37	160	15	25	65	315	315	260	260	20	420	385	146	610
160L	2-6	254	254	—	108	42	110	12	37	160	15	25	65	315	315	260	305	20	420	385	146	655
180M	2-4	279	241	—	121	48	110	14	42.5	180	15	35	70	350	360	275	315	22	460	420	161	680
180L	4-6	279	279	—	121	48	110	14	42.5	180	15	35	70	350	360	275	350	22	460	420	161	720
200L	2-6	318	305	—	133	55	110	16	49	200	19	32	70	390	400	310	370	25	510	465	186	780
225S	4	356	286	—	149	60	140	18	53	225	19	46	75	435	450	335	370	28	560	510	189	815
225M	2	356	311	—	149	55	110	16	49	225	19	46	75	435	450	335	395	28	560	510	189	810
	4-6	356	311	—	149	60	140	18	53	225	19	46	75	435	450	335	395	28	560	510	189	840
250M	2	406	349	—	168	60	140	18	53	250	24	55	80	485	485	375	445	30	625	570	207	915
	4-6	406	349	—	168	65	140	18	58	250	24	55	80	485	485	375	445	30	625	570	207	915
280S	2	457	368	—	190	65	140	18	58	280	24	70	85	545	550	400	485	35	680	645	215	1000
	4-6	457	368	—	190	75	140	20	67.5	280	24	70	85	545	550	400	485	35	680	645	215	1015
280M	2	457	419	—	190	65	140	18	58	280	24	70	85	545	550	400	540	35	680	645	215	1055
	4-6	457	419	—	190	75	140	20	67.5	280	24	70	85	545	550	400	540	35	680	645	215	1065

机座号 Frame Size	极 数 Pole	安装尺寸 Installation Dimensions											外形尺寸 Outline Dimensions									
		A	B	B1	C	D	E	F	G	H	K	X	AA	AB	AC	AD	BB	HA	HD 上出线 Top	HD 旁出线 Left/Right	LD	L
315S	2	508	406	—	216	65	140	18	58	315	28	84	120	630	620	530	570	45	845	745	257	1190
	4-6	508	406	—	216	80	170	22	71	315	28	84	120	630	620	530	570	45	845	745	257	1215
315ML	2	508	457	508	216	65	140	18	58	315	28	84	120	630	620	530	680	45	845	745	257	1295
	4-6	508	457	508	216	80	170	22	71	315	28	84	120	630	620	530	680	45	845	745	257	1325
355ML (国内)	2	610	560	630	254	75	140	20	67.5	355	28	68	116	730	700	600	750	52	960	845	284	1515
	4-6	610	560	630	254	95	170	25	86	355	28	68	116	730	700	600	750	52	960	845	284	1545
355ML (IEC)	2	610	560	630	254	80	170	22	71	355	28	68	116	730	700	600	750	52	960	845	284	1545
	4-6	610	560	630	254	100	210	28	90	355	28	68	116	730	700	600	750	52	960	845	284	1585

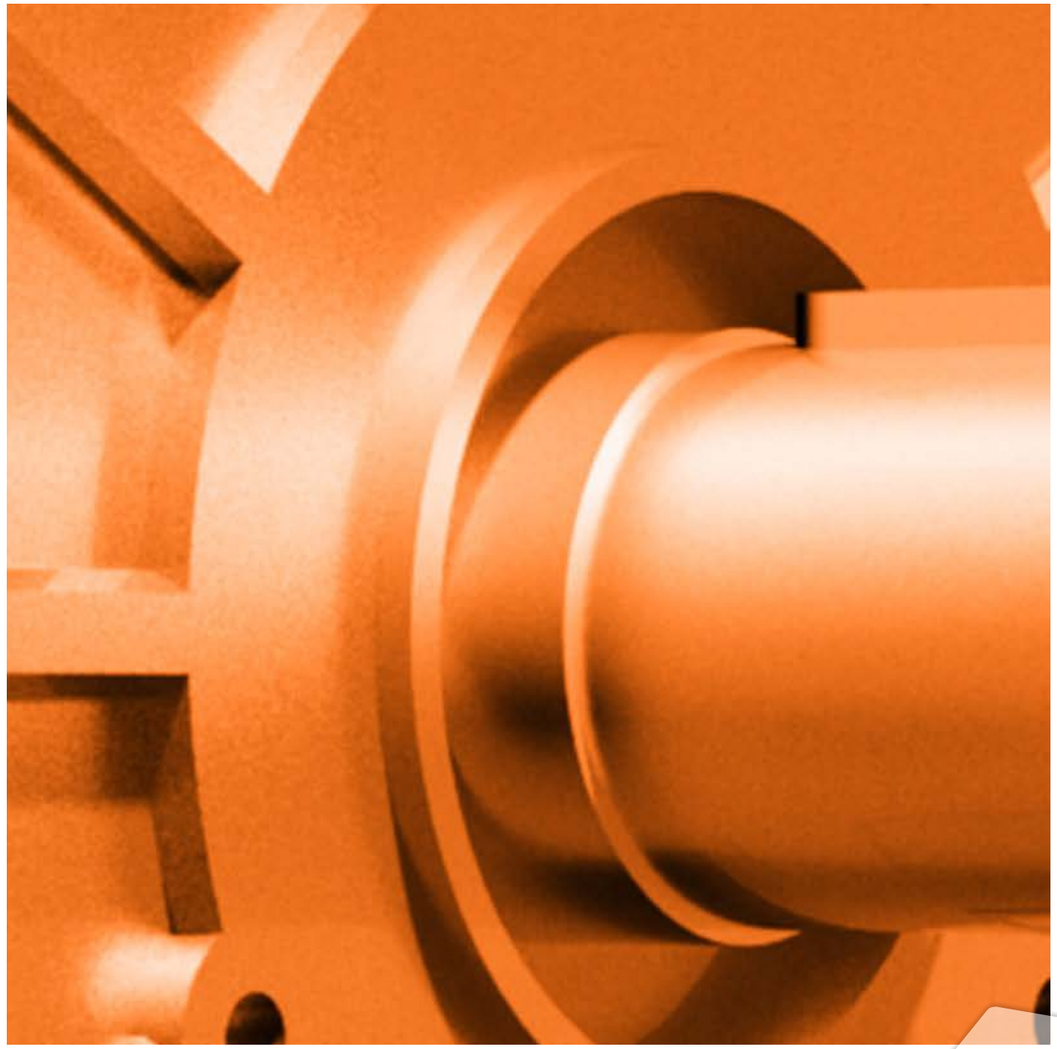

OMT3系列(IP55)三相异步电动机
IE3 (CHINESE GRADE 3)

机械尺寸数据(Outline&Installation Dimensions) V1

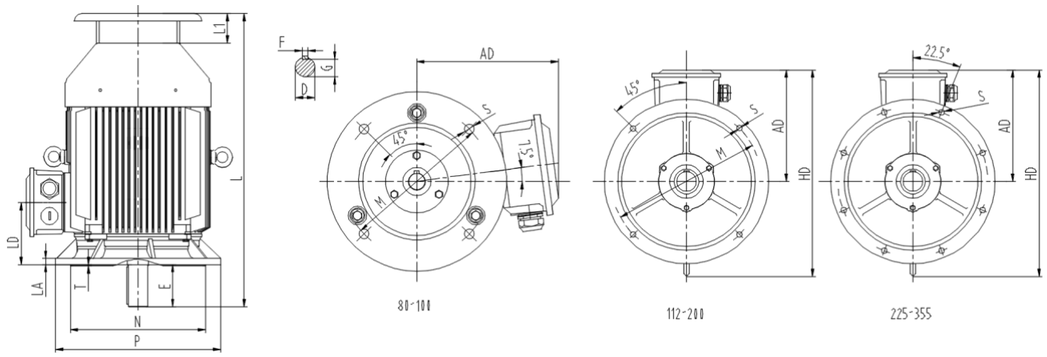

机座号 Frame Size	极 数 Pole	安装尺寸 Installation Dimensions									外形尺寸 Outline Dimensions						
		D	E	F	G	M	N	P	S	T	AC	AD	HD	LA	LD	L1	L
80	2-6	19	40	6	15.5	165	130	200	4-Φ12	3.5	176	160	—	12	76	45	350
90S	2-6	24	50	8	20	165	130	200	4-Φ12	3.5	176	165	—	12	75	45	400
90L	2-6	24	50	8	20	165	130	200	4-Φ12	3.5	176	165	—	12	75	45	430
100L	2-6	28	60	8	24	215	180	250	4-Φ15	4	206	180	—	13	83	45	480
112M	2-6	28	60	8	24	215	180	250	4-Φ15	4	220	200	355	14	87	50	460
132S	2-6	38	80	10	33	265	230	300	4-Φ15	4	260	215	395	14	102	50	525
132M	2-6	38	80	10	33	265	230	300	4-Φ15	4	260	215	395	14	102	50	565
160M	2-6	42	110	12	37	300	250	350	4-Φ19	5	315	260	485	15	146	55	665
160L	2-6	42	110	12	37	300	250	350	4-Φ19	5	315	260	485	15	146	55	710
180M	2-4	48	110	14	42.5	300	250	350	4-Φ19	5	360	275	515	15	161	60	740
180L	4-6	48	110	14	42.5	300	250	350	4-Φ19	5	360	275	515	15	161	60	780
200L	2-6	55	110	16	49	350	300	400	4-Φ19	5	400	310	580	17	186	75	855
225S	4	60	140	18	53	400	350	450	8-Φ19	5	450	335	620	20	189	90	905
225M	2	55	110	16	49	400	350	450	8-Φ19	5	450	335	620	20	189	90	900
	4-6	60	140	18	53	400	350	450	8-Φ19	5	450	335	620	20	189	90	930
250M	2	60	140	18	53	500	450	550	8-Φ19	5	485	375	695	20	207	100	1015
	4-6	65	140	18	58	500	450	550	8-Φ19	5	485	375	695	20	207	100	1015
280S	2	65	140	18	58	500	450	550	8-Φ19	5	550	400	765	22	215	120	1120
	4-6	75	140	20	67.5	500	450	550	8-Φ19	5	550	400	765	22	215	120	1135
280M	2	65	140	18	58	500	450	550	8-Φ19	5	550	400	765	22	215	120	1175
	4-6	75	140	20	67.5	500	450	550	8-Φ19	5	550	400	765	22	215	120	1185

机座号 Frame Size	极 数 Pole	安装尺寸 Installation Dimensions									外形尺寸 Outline Dimensions						
		D	E	F	G	M	N	P	S	T	AC	AD	HD	LA	LD	L1	L
315S	2	65	140	18	58	600	550	660	8-Φ24	6	620	530	985	22	257	120	1305
	4-6	80	170	22	71	600	550	660	8-Φ24	6	620	530	985	22	257	120	1335
315ML	2	65	140	18	58	600	550	660	8-Φ24	6	620	530	985	22	257	120	1415
	4-6	80	170	22	71	600	550	660	8-Φ24	6	620	530	985	22	257	120	1445
355ML (国内)	2	75	140	20	67.5	740	680	800	8-Φ24	6	700	600	1090	25	284	140	1655
	4-6	95	170	25	86	740	680	800	8-Φ24	6	700	600	1090	25	284	140	1685
355ML (国外)	2	80	170	22	71	740	680	800	8-Φ24	6	700	600	1090	25	284	140	1685
	4-6	100	210	28	90	740	680	800	8-Φ24	6	700	600	1090	25	284	140	1725

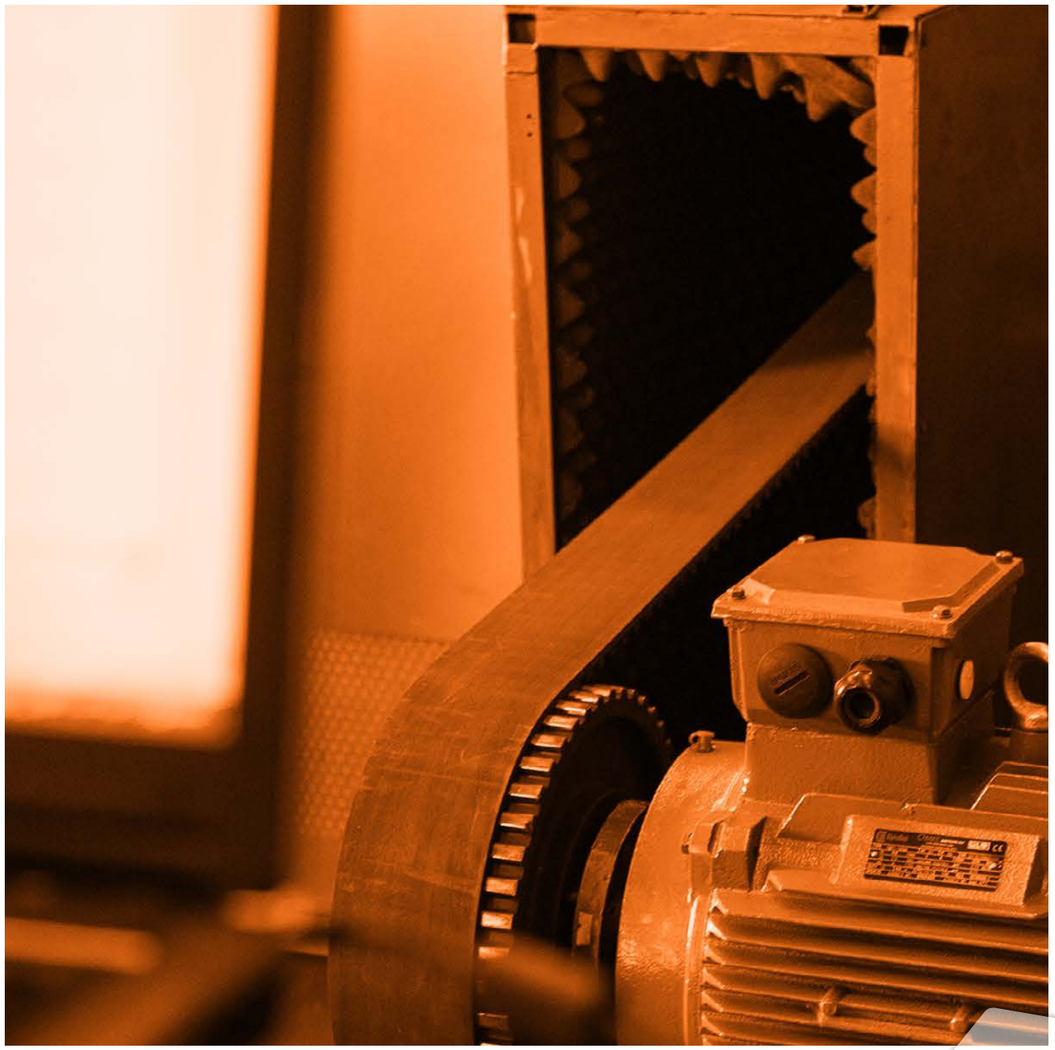

OMT3系列(IP55)三相异步电动机
IE3 (CHINESE GRADE 3)

机械尺寸数据(Outline&Installation Dimensions) B35

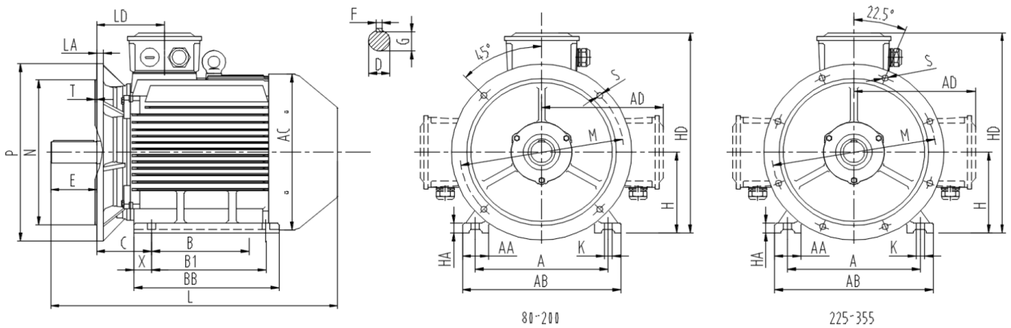

机座号 Frame Size	极数 Pole	安装尺寸 Installation Dimensions															外形尺寸 Outline Dimensions										
		A	B	B1	C	D	E	F	G	H	K	X	M	N	P	S	T	AA	AB	AC	AD	BB	HA	HD 上出线 Top	HD 旁出线 Left/Right	LA	LD	L
80	2-6	125	100	—	50	19	40	6	15.5	80	10	14	165	130	200	4-Φ12	3.5	34	35	176	160	130	10	235	175	12	76	305
90S	2-6	140	100	—	56	24	50	8	20	90	10	20	165	130	200	4-Φ12	3.5	36	40	176	165	180	12	245	180	12	75	355
90L	2-6	140	125	—	56	24	50	8	20	90	10	20	165	130	200	4-Φ12	3.5	36	40	176	165	210	12	245	180	12	75	385
100L	2-6	160	140	—	63	28	60	8	24	100	12	18	215	180	250	4-Φ15	4	40	40	206	180	235	14	275	250	13	83	435
112M	2-6	190	140	—	70	28	60	8	24	112	12	20	215	180	250	4-Φ15	4	45	45	220	200	180	15	310	265	14	87	410
132S	2-6	216	140	—	89	38	80	10	33	132	12	23	265	230	300	4-Φ15	4	55	55	260	215	190	18	350	315	14	102	475
132M	2-6	216	178	—	89	38	80	10	33	132	12	23	265	230	300	4-Φ15	4	55	55	260	215	225	18	350	315	14	102	515
160M	2-6	254	210	—	108	42	110	12	37	160	15	25	300	250	350	4-Φ19	5	65	65	315	260	260	20	420	385	15	146	610
160L	2-6	254	254	—	108	42	110	12	37	160	15	25	300	250	350	4-Φ19	5	65	65	315	260	305	20	420	385	15	146	655
180M	2-4	279	241	—	121	48	110	14	42.5	180	15	35	300	250	350	4-Φ19	5	70	70	360	275	315	22	460	420	15	161	680
180L	4-6	279	279	—	121	48	110	14	42.5	180	15	35	300	250	350	4-Φ19	5	70	70	360	275	350	22	460	420	15	161	720
200L	2-6	318	305	—	133	55	110	16	49	200	19	32	350	300	400	4-Φ19	5	70	70	400	310	370	25	510	465	17	186	780
225S	4	356	286	—	149	60	140	18	53	225	19	46	400	350	450	8-Φ19	5	75	75	450	335	370	28	560	510	20	189	815
225M	2	356	311	—	149	55	110	16	49	225	19	46	400	350	450	8-Φ19	5	75	75	450	335	395	28	560	510	20	189	810
	4-6	356	311	—	149	60	140	18	53	225	19	46	400	350	450	8-Φ19	5	75	75	450	335	395	28	560	510	20	189	840
250M	2	406	349	—	168	60	140	18	53	250	24	55	500	450	550	8-Φ19	5	80	80	485	375	445	30	625	570	20	207	915
	4-6	406	349	—	168	65	140	18	58	250	24	55	500	450	550	8-Φ19	5	80	80	485	375	445	30	625	570	20	207	915
280S	2	457	368	—	190	65	140	18	58	280	24	70	500	450	550	8-Φ19	5	85	85	550	400	485	35	680	645	22	215	1000
	4-6	457	368	—	190	75	140	20	67.5	280	24	70	500	450	550	8-Φ19	5	85	85	550	400	485	35	680	645	22	215	1015
280M	2	457	419	—	190	65	140	18	58	280	24	70	500	450	550	8-Φ19	5	85	85	550	400	540	35	680	645	22	215	1055
	4-6	457	419	—	190	75	140	20	67.5	280	24	70	500	450	550	8-Φ19	5	85	85	550	400	540	35	680	645	22	215	1065

机座号 Frame Size	极数 Pole	安装尺寸 Installation Dimensions																外形尺寸 Outline Dimensions										
		A	B	B1	C	D	E	F	G	H	K	X	M	N	P	S	T	AA	AB	AC	AD	BB	HA	HD 上出线 Top	HD 旁出线 Left/Right	LA	LD	L
315S	2	508	406	—	216	65	140	18	58	315	28	84	600	550	660	8-Φ24	6	120	120	620	530	570	45	845	745	22	257	1190
	4-6	508	406	—	216	80	170	22	71	315	28	84	600	550	660	8-Φ24	6	120	120	620	530	570	45	845	745	22	257	1215
315ML	2	508	457	508	216	65	140	18	58	315	28	84	600	550	660	8-Φ24	6	120	120	620	530	680	45	845	745	22	257	1295
	4-6	508	457	508	216	80	170	22	71	315	28	84	600	550	660	8-Φ24	6	120	120	620	530	680	45	845	745	22	257	1325
355ML (国内)	2	610	560	630	254	75	140	20	67.5	355	28	68	740	680	800	8-Φ24	6	116	120	700	600	750	52	960	845	25	284	1515
	4-6	610	560	630	254	95	170	25	86	355	28	68	740	680	800	8-Φ24	6	116	120	700	600	750	52	960	845	25	284	1545
355ML (IEC)	2	610	560	630	254	80	170	22	71	355	28	68	740	680	800	8-Φ24	6	116	120	700	600	750	52	960	845	25	284	1545
	4-6	610	560	630	254	100	210	28	90	355	28	68	740	680	800	8-Φ24	6	116	120	700	600	750	52	960	845	25	284	1585

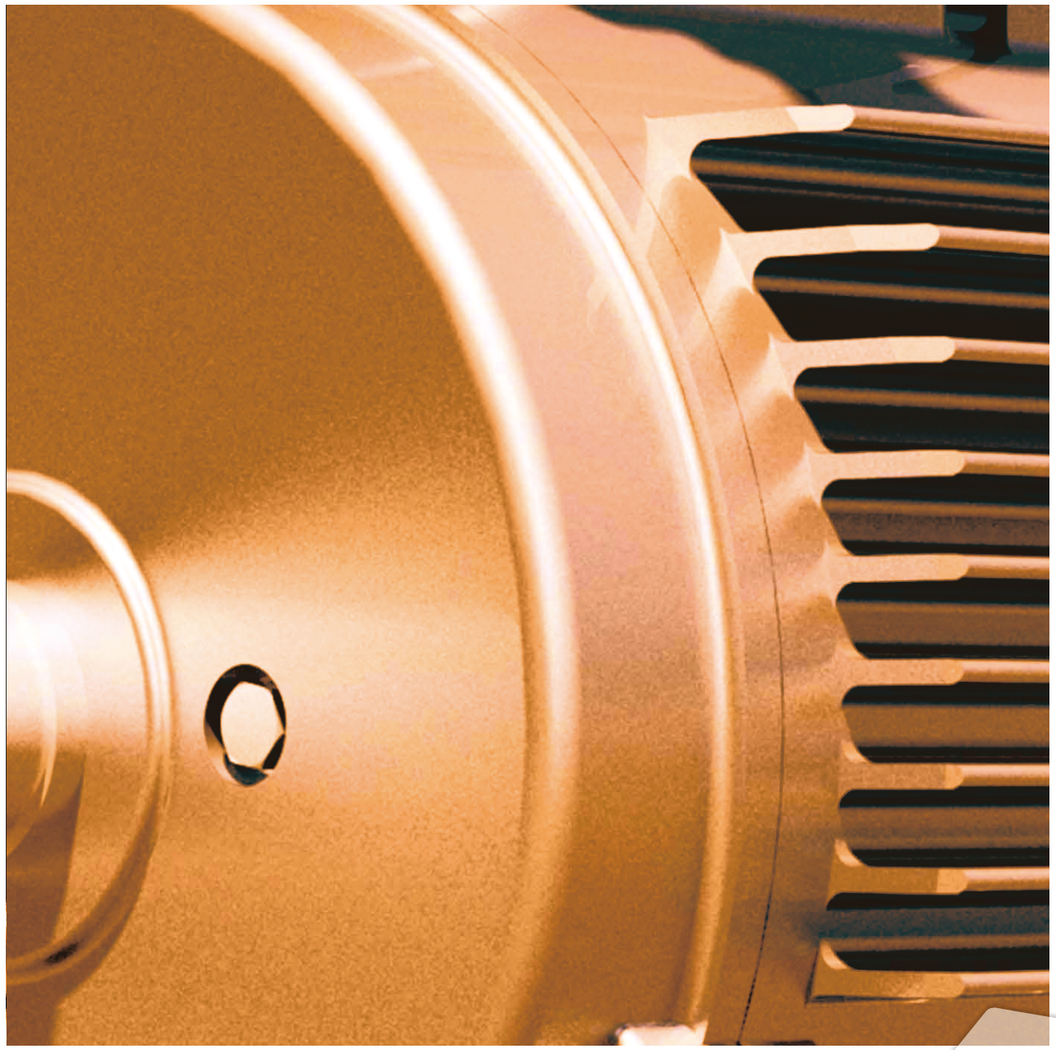

OMT3系列(IP55)三相异步电动机
IE3 (CHINESE GRADE 3)

机械尺寸数据(OMT3) Outline&Installation Dimensions (OMT3)B5

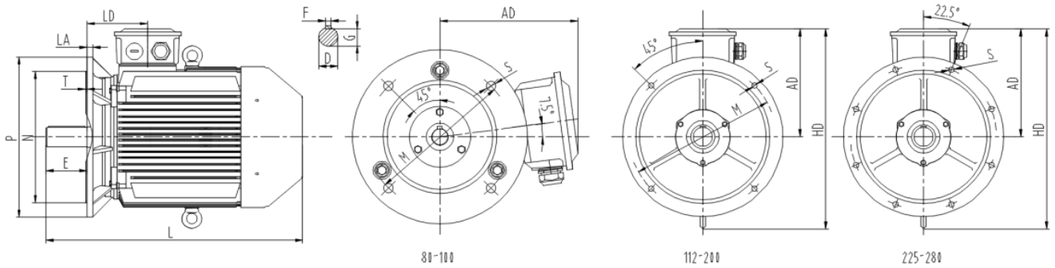

机座号 Frame Size	极数 Pole	安装尺寸 Installation Dimensions									外形尺寸 Outline Dimensions					
		D	E	F	G	M	N	P	S	T	AC	AD	HD	LA	LD	L
80	2-6	19	40	6	15.5	165	130	200	4-Φ12	3.5	176	160	—	12	76	305
90S	2-6	24	50	8	20	165	130	200	4-Φ12	3.5	176	165	—	12	75	355
90L	2-6	24	50	8	20	165	130	200	4-Φ12	3.5	176	165	—	12	75	385
100L	2-6	28	60	8	24	215	180	250	4-Φ15	4	206	180	—	13	83	435
112M	2-6	28	60	8	24	215	180	250	4-Φ15	4	220	200	355	14	87	410
132S	2-6	38	80	10	33	265	230	300	4-Φ15	4	260	215	395	14	102	475
132M	2-6	38	80	10	33	265	230	300	4-Φ15	4	260	215	395	14	102	515
160M	2-6	42	110	12	37	300	250	350	4-Φ19	5	315	260	485	15	146	610
160L	2-6	42	110	12	37	300	250	350	4-Φ19	5	315	260	485	15	146	655
180M	2-4	48	110	14	42.5	300	250	350	4-Φ19	5	360	275	515	15	161	680
180L	4-6	48	110	14	42.5	300	250	350	4-Φ19	5	360	275	515	15	161	720
200L	2-6	55	110	16	49	350	300	400	4-Φ19	5	400	310	580	17	186	780
225S	4	60	140	18	53	400	350	450	8-Φ19	5	450	335	620	20	189	815
225M	2	55	110	16	49	400	350	450	8-Φ19	5	450	335	620	20	189	810
	4-6	60	140	18	53	400	350	450	8-Φ19	5	450	335	620	20	189	840
250M	2	60	140	18	53	500	450	550	8-Φ19	5	485	375	695	20	207	915
	4-6	65	140	18	58	500	450	550	8-Φ19	5	485	375	695	20	207	915
280S	2	65	140	18	58	500	450	550	8-Φ19	5	550	400	765	22	215	1000
	4-6	75	140	20	67.5	500	450	550	8-Φ19	5	550	400	765	22	215	1015
280M	2	65	140	18	58	500	450	550	8-Φ19	5	550	400	765	22	215	1055
	4-6	75	140	20	67.5	500	450	550	8-Φ19	5	550	400	765	22	215	1065

OMT3系列(IP55)三相异步电动机
IE3 (CHINESE GRADE 3)

空载/负载最大A计权声功率级值LwA (dB)

中心高 mm	同步转速 (r/min)														
	3000			1500			1000			750			600		
80	62	/	64	56	/	61	54	/	61	52	/	60	—	/	—
90	67	/	69	59	/	64	57	/	64	56	/	64	—	/	—
100	74	/	76	64	/	69	61	/	68	59	/	67	—	/	—
112	77	/	79	65	/	70	65	/	72	61	/	69	—	/	—
132	79	/	81	71	/	76	69	/	76	64	/	72	—	/	—
160	81	/	83	73	/	78	73	/	80	68	/	76	—	/	—
180	83	/	85	76	/	80	73	/	79	70	/	77	—	/	—
200	84	/	86	76	/	80	73	/	79	73	/	80	—	/	—
225	86	/	88	78	/	81	74	/	80	73	/	80	—	/	—
250	89	/	91	79	/	82	76	/	82	75	/	82	—	/	—
280	91	/	93	80	/	83	78	/	84	76	/	83	—	/	—
315	92	/	94	88	/	91	83	/	88	82	/	88	82	/	89
355	100	/	102	95	/	97	85	/	89	89	/	94	90	/	96

容差：+3dB（A）

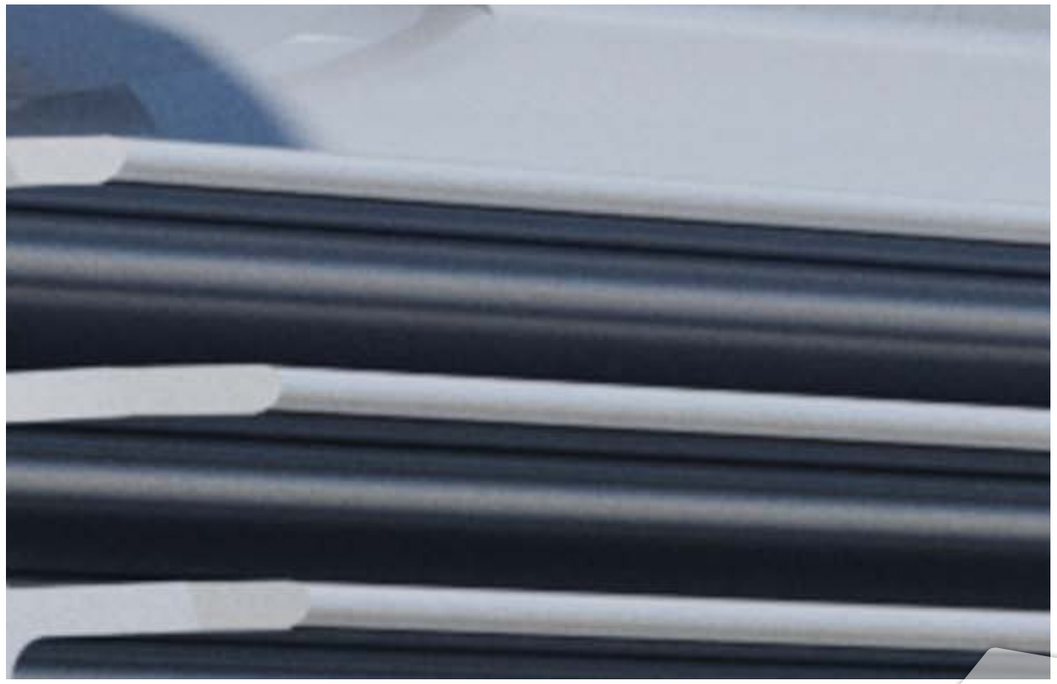

OMT3系列(IP55)三相异步电动机
IE3 (CHINESE GRADE 3)

产品的电气性能数据(Technical Data)

电机型号 Motor Type	功率 Rated Power		额定转速 Rated Speed	效率 Efficiency	功率因数 Power Factor	电流 Current			转矩 Torque			转动惯量 Moment of inertia(J)	重量 Approx WT
						Full Load 400V	Full Load 690V	Locked Rotor	Full Load	Locked Rotor	Pull Out		
	KW	(HP)	RPM	%	%	A	A	%FLC	Kg-m	%FLT	%FLT	Kg-m²	Kg
OMT3-400F1-02P	355	475	2985	95.8	89	601	348	750	116	150	200	5.9	2550
OMT3-400F2-02P	400	535	2985	95.8	89	677	393	750	131	150	200	6.4	2630
OMT3-400F3-02P	450	605	2985	95.8	89	762	442	750	147	150	200	6.9	2810
OMT3-400F4-02P	500	670	2985	95.8	89	846	491	750	163	150	200	7.4	3025
OMT3-400F4-02P	560	750	2985	95.8	89	948	550	750	183	150	200	7.9	3075
OMT3-400F1-04P	355	475	1485	96	88	607	352	700	233	110	200	14.2	2780
OMT3-400F2-04P	400	535	1485	96	88	683	396	700	262	110	200	14.9	2980
OMT3-400F3-04P	450	605	1485	96	88	769	446	700	295	110	200	15.9	3090
OMT3-400F4-04P	500	670	1485	96	88	854	495	750	328	110	200	17.8	3190
OMT3-400F5-04P	560	750	1485	96	88	957	555	750	367	110	200	19.7	3310
OMT3-400F1-06P	315	420	990	95.8	85	558	324	650	310	120	200	23.3	2900
OMT3-400F2-06P	355	475	990	95.8	85	629	365	650	349	120	200	25.1	3035
OMT3-400F3-06P	400	535	990	95.8	85	709	411	650	394	120	200	27	3150
OMT3-400F4-06P	450	605	990	95.8	85	798	462	650	443	120	200	29.4	3360
OMT3-400F5-06P	500	670	990	95.8	85	886	514	650	492	120	200	30	3580
OMT3-400F1-08P	250	335	742	94.7	81	470	273	650	328	110	200	26.7	2780
OMT3-400F2-08P	280	375	742	94.8	81	526	305	650	368	110	200	28.9	3000
OMT3-400F3-08P	315	420	742	94.9	81	591	343	650	414	110	200	31.1	3100
OMT3-400F4-08P	355	475	742	95.1	81	665	386	650	466	110	200	33.7	3310
OMT3-400F5-08P	400	535	742	95.2	81	749	434	650	525	110	200	35.6	3590
OMT3-400F1-10P	180	240	590	94.0	78	354	205	600	297	110	200	25.2	2680
OMT3-400F2-10P	200	270	590	94.1	78	393	228	600	330	110	200	27.1	2810
OMT3-400F3-10P	220	295	590	94.2	78	432	251	600	363	110	200	28.6	3060
OMT3-400F4-10P	250	335	592	94.3	78	491	284	600	412	110	200	30.1	3280
OMT3-400F5-10P	280	375	592	94.5	78	548	318	600	461	110	200	32.8	3410
OMT3-400F1-12P	160	215	492	94.4	72	340	197	550	317	100	200	27.4	2750
OMT3-400F2-12P	180	240	492	94.5	72	382	221	550	357	100	200	28.6	2880
OMT3-400F3-12P	200	270	492	94.6	72	424	246	550	396	100	200	29.8	3100
OMT3-400F4-12P	220	295	492	94.7	72	466	270	550	436	100	200	31.9	3290
OMT3-400F5-12P	250	335	492	94.8	72	529	306	550	495	100	200	33.8	3450

OMT3系列(IP55)三相异步电动机
IE3 (CHINESE GRADE 3)

机械尺寸数据(Outline&Installation Dimensions) B3

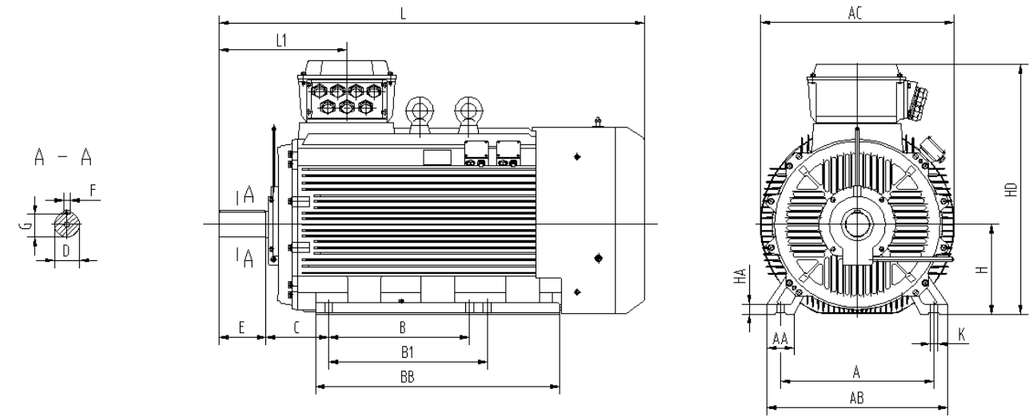

• 安装尺寸表 MOUNTING DIMENSIONS FOR INSTALLATION

机座号 Frame Size	极数 Pole	安装尺寸 Installation Dimensions											
		A	B	B1	C	D		E	F	G		H		K
400	2	686	630	710	280±4	80	+0.030 +0.011	170±0.5	22	71	0 -0.2	400	0 -1	35
400	4~12	686	630	710	280±4	110	+0.035 +0.013	210±0.57	28	100	0 -0.2	400	0 -1	35

• 外形尺寸表 OUTLINE DIMENSIONS FOR INSTALLATION

机座号 Frame Size	极数 Pole	安装尺寸 Installation Dimensions							
		AC	AA	AB	BB	HA	HD	L1	L
400	2	885	120	810	1090	45	1123	532	1820
400	4~12	885	120	810	1090	45	1123	572	1920

OMT3系列(IP55)三相异步电动机
IE3 (CHINESE GRADE 3)

机械尺寸数据 Outline&Installation Dimensions B35

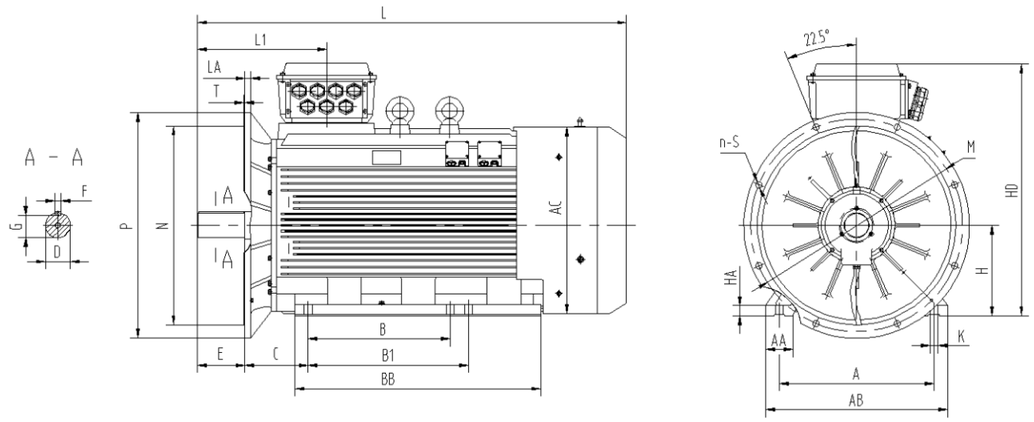

• 安装尺寸表MOUNTING DIMENSIONS FOR INSTALLATION

机座号 Frame Size	极数 Pole	安装尺寸 Installation Dimensions												
		A	B	B1	C	D		E	F	G		H		K
400	2	686	630	710	280±4	80	+0.030 +0.011	170±0.5	22	71	0 -0.2	400	0 -1	35
400	4～10	686	630	710	280±4	110	+0.035 +0.013	210±0.57	28	100	0 -0.2	400	0 -1	35

• 外形尺寸表OUTLINE DIMENSIONS FOR INSTALLATION

机座号 Frame Size	极数 Pole	安装尺寸 Installation Dimensions													
		M	N	P	n-S	T	LA	AA	AB	AC	BB	HA	HD	L1	L
400	2	940	880	1000	8-28	6	25	120	810	830	1090	45	1123	532	1820
400	4~10	940	880	1000	8-28	6	25	120	810	830	1090	45	1123	572	1920

OMT3系列(IP55)三相异步电动机
IE3 (CHINESE GRADE 3)

机械尺寸数据 Outline&Installation Dimensions V1

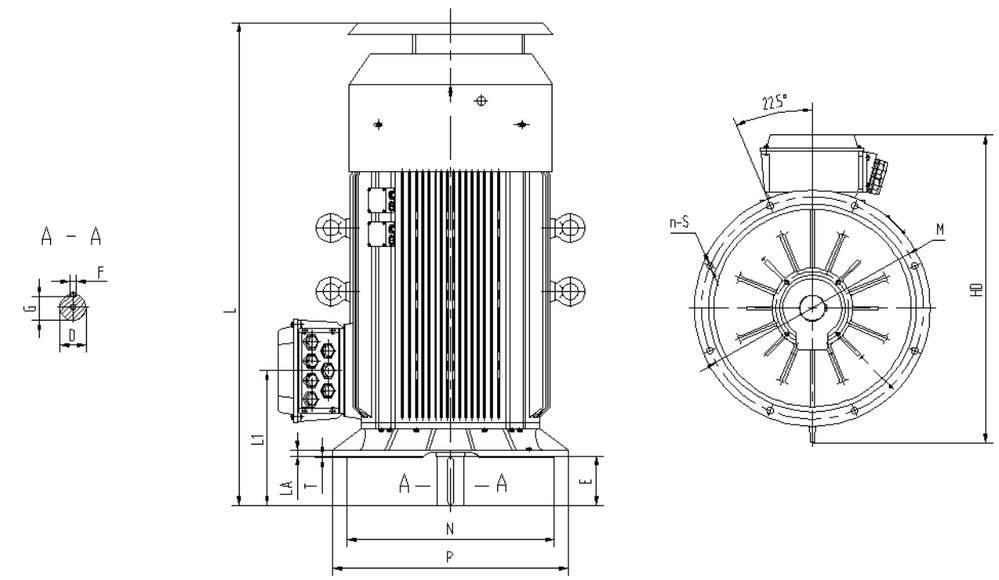

• 安装尺寸表 MOUNTING DIMENSIONS FOR INSTALLATION

机座号 Frame Size	极数 Pole	安装尺寸 Installation Dimensions															
		D		E	F	G		M	N	P	n-S	T	LA	HD	L1	L
400	2	80	+0.030 +0.011	170	22	71	0 -0.2	940	880	1000	8-28	6	25	1300	532	1970
400	4～10	110	+0.035 +0.013	210	28	100	0 -0.2	940	880	1000	8-28	6	25	1300	572	2050

OMT4系列（IP55）三相异步电动机

IE4 (CHINESE GRADE 2)

功率范围（Power）：0.75-355KW；
机座范围（Frame）：H80-355。

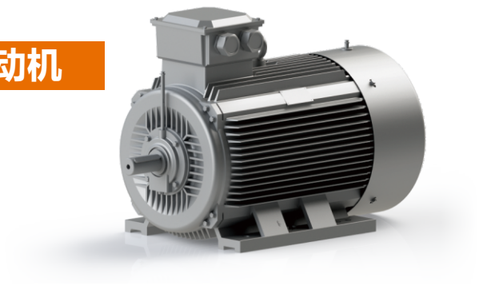

基本技术要求及特点

- 全封闭自扇冷却式三相异步电动机，设计符合IEC、GB等相关标准要求；
- 外壳材料全部为灰铸铁;
- 电动机效率符合GB18613-2020标准能效等级二级及IEC60034-30标准的IE4效率等级要求；
- 特定绕组设计，支持多种电压(50HZ或60HZ)；
- 可承受1.5倍额定电流达2分钟(IEC60034-1)；
- 可选配防潮加热带(空间加热器)；
- 可选配PTC或PT100等热敏元件进行绕组或轴承热保护。

Technical characteristics

- Totally enclosed fan-cooled three-phase asynchronous motor are designed according to IEC,GB and relevant standards;
- Housings are made of gray cast iron;
- Efficiency value meets the grade 2 efficiency in GB18613-2020 and IE4 efficiency in IEC60034-30;
- Special winding design support multiple voltages (50HZ or 60HZ);
- Withstand 1.5 times rated current for 2 minutes (IEC60034-1);
- Optional heater for moisture-proof;
- PTC or PT100 can be selected for thermal protection of windings or bearings.

产品优势

- **效率提高**
  通过新型绕组设计，采用低损耗硅钢材料及先进制造工艺减少电机损耗，提高电能转换效率，为客户提高经济效益，并减少能源使用，保护环境；
- **质量、性能提升**
  为确保良好的绝缘性能，增加电机使用寿命，标准电机采用F级绝缘系统并按B级考核(80K);
- **电压、效率**
  标准电机的供电电压和频率符合IEC60034-1标准中规定的A类电压和频率误差 要求，允许电压偏差为±5%，频率偏差±2%；
- **额定输出**
  根据IEC60034-1标准要求，在额定电压和频率下能承受1.5倍额定电流持续2分钟。

Product advantages

- **Efficiency improvement**
  New winding designs, low loss silicon steel sheets and advanced manufacture process are applied to decrease the motors loss and improve the efficiency.
- **Reliable quality and superior characteristics**
  To insure the good insulation and extend the lifetime, standard motors are according to F/B.
- **Voltage, efficiency**
  According to Class A voltage and frequency tolerance demands in IEC60034-1 standard, the motor's voltage tolerance is ±5%,and the frequency tolerance is±2%.
- **Rated output**
  According to IEC60034-1 standard, it can withstand 1.5 times rated current for 2 minutes under rated voltage and frequency.

产品应用领域

- 可用于驱动各种通用机械，如机床、空压机、水泵、风机、减速机、传输带、矿山机械、冶金设备等，不含易燃，易爆或腐蚀性气体场合。

Applications

- Motors can be applied to all kinds of machines, such as machine tool,air compressor, pump, ventilation, reduction gear, transmission belt, mining equipment, metallic equipment. However, motors can't be used for flammable, explosive and corrosive working site.

OMT4系列(IP55)三相异步电动机

IE4 (CHINESE GRADE 2)

产品的电气性能数据(Technical Data)

电机型号 Motor Type	功率 Rated Power		额定转速 Rated Speed	效率 Efficiency	功率因数 Power Factor	电流 Current			转矩 Torque		转动惯量 Moment of inertia(J)	重量 Approx WT
						Full Load 400V	Full Load 690V	Locked Rotor	Locked Rotor	Pull Out		
	KW	(HP)	RPM	%		A	A	FLC	FLT	FLT	Kg-m²	Kg
OMT4-080M1-02P	0.75	1.0	2845	83.5	0.82	1.6	-	7.5	2.2	2.3	0.0011	19
OMT4-080M2-02P	1.1	1.5	2865	85.2	0.83	2.2	-	7.4	2.1	2.2	0.0013	20
OMT4-080M2-04P	0.75	1.0	1410	85.7	0.75	1.7	-	7.3	2.3	2.3	0.0017	21
OMT4-090S0-02P	1.5	2.0	2875	86.5	0.84	3.0	-	7.5	2.1	2.2	0.0019	25
OMT4-090L0-02P	2.2	3.0	2865	88.0	0.85	4.2	-	7.5	2.2	2.3	0.0022	28
OMT4-090S0-04P	1.1	1.5	1415	87.2	0.76	2.4	-	7.5	2.3	2.6	0.0021	25
OMT4-090L0-04P	1.5	2.0	1420	88.2	0.77	3.2	-	7.6	2.4	2.7	0.0027	32
OMT4-090S0-06P	0.75	1.0	905	82.7	0.69	1.9	-	6.3	2.0	2.3	0.0032	26
OMT4-090L0-06P	1.1	1.5	910	84.5	0.70	2.7	-	6	1.9	2.3	0.0041	28
OMT4-100L0-02P	3	4.0	2860	89.1	0.87	5.6	-	7.6	2.0	2.2	0.0043	38
OMT4-100L1-04P	2.2	2.9	1420	89.5	0.77	4.6	-	7.5	2.4	2.7	0.0054	39
OMT4-100L2-04P	3	4.0	1440	90.4	0.78	6.1	-	7.4	2.5	2.8	0.0067	43
OMT4-100L0-06P	1.5	2.0	925	85.9	0.70	3.6	-	6.4	2.0	2.5	0.0085	38
OMT4-160M1-02P	11	15	2930	92.6	0.89	19.3	11.2	9.5	2.0	2.3	0.0515	129
OMT4-160M2-02P	15	20	2930	93.3	0.89	26.1	15.1	9.5	2.0	2.3	0.0624	142
OMT4-160L0-02P*	18.5	25	2930	93.7	0.89	32.0	18.6	9.5	2.0	2.3	0.0780	169
OMT4-160M0-04P	11	15	1465	93.3	0.83	20.5	11.9	9.5	2.0	2.3	0.1109	149
OMT4-160L0-04P*	15	20	1465	93.9	0.84	27.4	15.9	9.5	2.0	2.3	0.1249	153
OMT4-160M0-06P	7.5	10	975	91.3	0.76	15.6	9.0	8.0	2.0	2.1	0.1444	130
OMT4-160L0-06P*	11	15	975	92.3	0.77	22.3	13.0	8.5	2.0	2.1	0.1673	155
OMT4-160M1-08P	4	5.5	720	87.1	0.71	9.3	5.4	7.9	1.8	2.0	0.0754	113
OMT4-160M2-08P	5.5	7.5	720	88.3	0.72	12.5	7.2	8.1	1.8	2.0	0.1057	133
OMT4-160L0-08P	7.5	10	720	89.3	0.74	16.4	9.5	7.8	1.8	2.0	0.1268	148
OMT4-180M0-02P	22	30	2930	94.0	0.89	38.0	22.0	9.5	2.0	2.3	0.1188	216
OMT4-180M0-04P	18.5	25	1475	94.2	0.85	33.3	19.3	9.5	2.0	2.3	0.1822	198
OMT4-180L0-04P*	22	30	1470	94.5	0.85	39.5	22.9	9.5	2.0	2.3	0.2052	223
OMT4-180L0-06P*	15	20	985	92.9	0.80	29.1	16.9	8.5	2.0	2.1	0.2843	202
OMT4-180L0-08P	11	15	725	90.4	0.74	23.7	13.8	7.9	1.8	2.0	0.1752	170
OMT4-200L1-02P	30	40	2965	94.5	0.89	51.5	29.8	9.0	2.0	2.3	0.1949	282
OMT4-200L2-02P*	37	50	2965	94.8	0.89	63.3	36.7	9.0	2.0	2.3	0.2186	309
OMT4-200L0-04P*	30	40	1480	94.9	0.85	53.7	31.1	9.0	2.0	2.3	0.3704	293
OMT4-200L1-06P*	18.5	25	985	93.4	0.80	35.7	20.7	8.5	2.0	2.1	0.4918	270
OMT4-200L2-06P*	22	30	985	93.7	0.81	41.8	24.3	8.5	2.0	2.1	0.5614	293

型号后缀*表示此规格需采用加长机座　Longer housing used for type with *

OMT4系列(IP55)三相异步电动机
IE4 (CHINESE GRADE 2)

产品的电气性能数据(Technical Data)

电机型号 Motor Type	功率 Rated Power		额定转速 Rated Speed	效率 Efficiency	功率因数 Power Factor	电流 Current			转矩 Torque		转动惯量 Moment of inertia(J)	重量 Approx WT
						Full Load 400V	Full Load 690V	Locked Rotor	Locked Rotor	Pull Out		
	KW	(HP)	RPM	%		A	A	FLC	FLT	FLT	Kg-m²	Kg
OMT4-200L0-08P	15	20	730	91.2	0.75	31.7	18.4	7.9	1.8	2.0	0.2876	230
OMT4-225M0-02P*	45	60	2965	95.0	0.89	76.8	44.5	9.0	2.0	2.3	0.3279	336
OMT4-225S0-04P	37	50	1485	95.2	0.85	66.0	38.3	9.0	2.0	2.3	0.6001	345
OMT4-225M0-04P*	45	60	1485	95.4	0.85	80.1	46.4	9.0	2.0	2.3	0.6431	385
OMT4-225M0-06P	30	40	985	94.2	0.82	56.1	32.5	8.3	2.0	2.1	0.7096	320
OMT4-225S0-08P	18.5	25	730	91.7	0.75	38.8	22.5	8.1	1.8	2.0	0.5380	272
OMT4-225M0-08P	22	30	730	92.1	0.76	45.4	26.3	8.3	1.8	2.0	0.6667	294
OMT4-250M0-02P	55	75	2965	95.3	0.89	93.6	54.3	9.0	2.0	2.3	0.4784	428
OMT4-250M0-04P	55	75	1480	95.7	0.86	96.5	55.9	9.0	2.0	2.3	0.8916	465
OMT4-250M0-06P	37	50	985	94.5	0.83	68.1	39.5	8.3	2.0	2.1	1.0694	403
OMT4-250M0-08P	30	40	730	92.7	0.77	60.7	35.2	7.9	1.8	2.0	0.8090	370
OMT4-280S0-02P	75	100	2975	95.6	0.89	127.2	73.8	8.5	1.8	2.3	0.6770	580
OMT4-280M0-02P	90	120	2975	95.8	0.89	152.4	88.3	8.5	1.8	2.3	0.8001	653
OMT4-280S0-04P	75	100	1490	96.0	0.87	129.6	75.1	8.5	2.0	2.3	1.4723	619
OMT4-280M0-04P	90	120	1490	96.1	0.88	153.6	89.1	8.5	2.0	2.3	1.6775	682
OMT4-280S0-06P	45	60	985	94.8	0.83	82.6	47.9	8.5	2.0	2.0	1.8447	580
OMT4-280M0-06P	55	75	985	95.1	0.84	99.4	57.6	8.5	2.0	2.0	2.2563	658
OMT4-280S0-08P	37	50	735	93.1	0.78	73.5	42.6	7.9	1.8	2.0	1.5470	475
OMT4-280M0-08P	45	60	735	93.4	0.78	89.2	51.7	7.9	1.8	2.0	1.8570	555
OMT4-315S0-02P	110	145	2975	96.0	0.89	185.8	107.7	8.5	1.8	2.3	1.5379	980
OMT4-315M0-02P	132	175	2975	96.2	0.89	222.5	129.0	8.5	1.8	2.3	1.8564	1082
OMT4-315L1-02P	160	215	2975	96.3	0.89	269.5	156.2	8.5	1.8	2.2	2.1504	1130
OMT4-315L2-02P*	200	270	2975	96.5	0.89	336.1	194.9	8.5	1.8	2.2	2.3575	1235
OMT4-315S0-04P	110	145	1480	96.3	0.89	185.3	107.4	8.5	1.8	2.2	3.4327	975
OMT4-315M0-04P	132	175	1480	96.4	0.89	222.1	128.7	8.5	1.8	2.2	3.9943	1095
OMT4-315L1-04P	160	215	1480	96.6	0.90	265.6	154.0	8.5	1.8	2.2	4.6494	1190
OMT4-315L2-04P*	200	270	1480	96.7	0.90	331.7	192.3	8.5	1.8	2.2	5.0238	1305
OMT4-315S0-06P	75	100	985	95.4	0.84	135.1	78.3	8.0	1.6	2.0	3.4169	861
OMT4-315M0-06P	90	120	985	95.6	0.85	159.9	92.7	8.0	1.6	2.0	4.1524	990
OMT4-315L1-06P	110	145	985	95.8	0.85	195.0	113.0	8.0	1.6	2.0	5.0761	1105
OMT4-315L2-06P	132	175	985	96.0	0.86	230.8	133.8	8.0	1.6	2.0	6.0984	1170
OMT4-315S0-08P	55	75	740	93.7	0.80	105.9	61.4	8.2	1.6	2.0	3.8220	905
OMT4-315M0-08P	75	100	740	94.2	0.80	143.7	83.3	7.6	1.6	2.0	5.4147	981

型号后缀*表示此规格需采用加长机座　Longer housing used for type with *

OMT4系列(IP55)三相异步电动机
IE4 (CHINESE GRADE 2)

产品的电气性能数据(Technical Data)

电机型号 Motor Type	功率 Rated Power		额定转速 Rated Speed	效率 Efficiency	功率因数 Power Factor	电流 Current			转矩 Torque		转动惯量 Moment of inertia(J)	重量 Approx WT
						Full Load 400V	Full Load 690V	Locked Rotor	Locked Rotor	Pull Out		
	KW	(HP)	RPM	%		A	A	FLC	FLT	FLT	Kg-m²	Kg
OMT4-315L1-08P	90	120	740	94.4	0.81	169.9	98.5	7.7	1.6	2.0	5.8250	
OMT4-315L2-08P	110	145	740	94.7	0.81	207.0	120.0	7.7	1.6	2.0	6.7530	1160
OMT4-355M0-02P	250	335	2980	96.5	0.91	410.9	238.2	8.5	1.6	2.2	3.1367	
OMT4-355L1-02P	280	375	2975	96.5	0.91	460.7	267.1	8.5	1.6	2.2	3.1367	1670
OMT4-355L2-02P	315	420	2980	96.5	0.91	517.8	300.2	8.5	1.6	2.2	3.6157	
OMT4-355L3-02P	355	475	2975	96.5	0.90	590.0	342.0	8.6	0.9	1.8	3.6157	1750
OMT4-355M0-04P	250	335	1490	96.7	0.90	414.6	240.4	8.5	1.8	2.2	7.9129	
OMT4-355L1-04P	280	375	1490	96.7	0.90	464.4	269.2	8.5	1.8	2.2	8.8271	1880
OMT4-355L2-04P	315	420	1490	96.7	0.90	522.4	302.9	8.5	1.8	2.2	8.8271	
OMT4-355L3-04P	355	475	1490	96.7	0.88	602.2	349.1	8.5	0.9	1.8	8.8271	1890
OMT4-355M1-06P	160	215	990	96.2	0.86	279.2	161.8	8.0	1.6	2.0	9.4364	
OMT4-355M2-06P	185	250	990	96.2	0.86	322.8	187.1	8.0	1.6	2.0	9.5737	1675
OMT4-355M3-06P	200	270	990	96.3	0.86	348.6	202.1	8.0	1.6	2.0	9.5737	
OMT4-355L1-06P	220	300	990	96.3	0.86	383.4	222.3	8.0	1.6	2.0	10.2890	1780
OMT4-355L2-06P	250	335	990	96.5	0.86	434.8	252.1	8.0	1.6	2.0	10.6467	1900
OMT4-355L3-06P	280	375	990	96.6	0.86	487.6	282.7	8.0	1.6	2.0	11.8857	2020
OMT4-355M1-08P	132	175	740	94.9	0.81	247.9	143.7	7.7	1.6	2.0	12.9000	1800
OMT4-355M2-08P	160	215	740	95.1	0.82	296.2	171.7	7.7	1.6	2.0	14.3000	1890
OMT4-355L1-08P	185	250	740	95.3	0.82	341.7	198.1	7.7	1.6	2.0	15.0000	1970
OMT4-355L2-08P	200	270	740	95.4	0.82	369.0	213.9	7.8	1.6	2.0	15.9000	2040

型号后缀*表示此规格需采用加长机座　Longer housing used for type with *

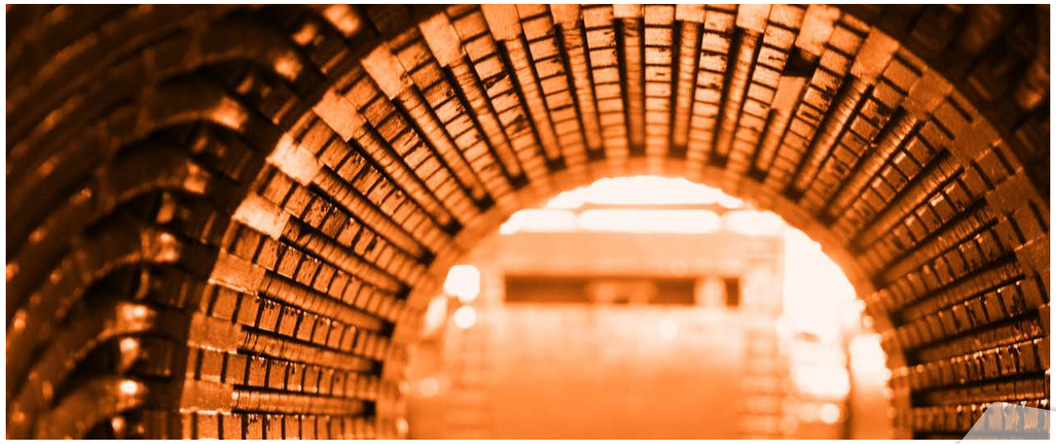

OMT4系列(IP55)三相异步电动机
IE4 (CHINESE GRADE 2)

机械尺寸数据(OMT4) Outline&Installation Dimensions (OMT4) B3

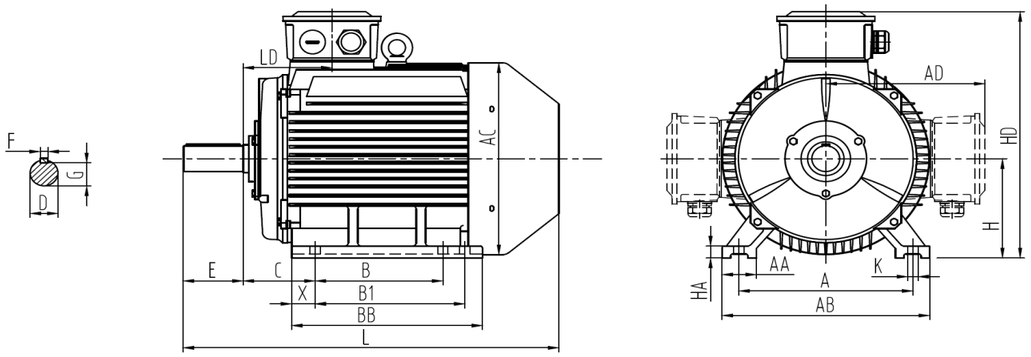

机座号 Frame Size	极 数 Pole	安装尺寸 Installation Dimensions											外形尺寸 Outline Dimensions									
		A	B	B1	C	D	E	F	G	H	K	X	AA	AB	AC	AD	BB	HA	HD 上出线 Top	HD 旁出线 Left/Right	LD	L
80	2-6	125	100	-	50	19	40	6	15.5	80	10	14	35	160	176	160	130	10	235	175	76	305
90S	2-6	140	100	-	56	24	50	8	20	90	10	20	40	180	176	165	180	12	245	180	75	355
90L	2-6	140	125	-	56	24	50	8	20	90	10	20	40	180	176	165	210	12	245	180	75	385
100L	2-6	160	140	-	63	28	60	8	24	100	12	18	40	200	206	180	235	14	275	250	83	435
160M、L	2-8	254	210	254	108	42	110	12	37	160	15	25	65	315	315	260	305	20	420	385	146	655
160L*	2-8	254	—	254	108	42	110	12	37	160	15	25	65	315	315	260	320	20	420	385	146	690
180M、L	2-8	279	241	279	121	48	110	14	42.5	180	15	35	70	350	360	275	350	22	460	420	161	720
180L*	2-8	279	279	—	121	48	110	14	42.5	180	15	35	70	350	360	275	350	22	460	420	161	780
200L	2-8	318	305	—	133	55	110	16	49	200	19	32	70	390	400	310	370	25	510	465	186	780
200L*	2-8	318	305	—	133	55	110	16	49	200	19	32	70	390	400	310	370	25	510	465	186	830
225S	4、8	356	286	311	149	60	140	18	53	225	19	46	75	435	450	335	395	28	560	510	189	845
225M	2	356	311	—	149	55	110	16	49	225	19	46	75	435	450	335	395	28	560	510	189	815
	4-8	356	286	311	149	60	140	18	53	225	19	46	75	435	450	335	395	28	560	510	189	845
225M*	2	356	311	—	149	55	110	16	49	225	19	46	75	435	450	335	395	28	560	510	189	880
	4-8	356	311	—	149	60	140	18	53	225	19	46	75	435	450	335	395	28	560	510	189	910
250M	2	406	349	—	168	60	140	18	53	250	24	55	80	485	485	375	445	30	625	570	207	915
	4-8	406	349	—	168	65	140	18	58	250	24	55	80	485	485	375	445	30	625	570	207	915
280S	2	457	368	—	190	65	140	18	58	280	24	70	85	545	550	400	485	35	680	645	215	1000
	4-8	457	368	—	190	75	140	20	67.5	280	24	70	85	545	550	400	485	35	680	645	215	1015
280M	2	457	419	—	190	65	140	18	58	280	24	70	85	545	550	400	536	35	680	645	215	1055
	4-8	457	419	—	190	75	140	20	67.5	280	24	70	85	545	550	400	536	35	680	645	215	1065

机座号 Frame Size	极 数 Pole	安装尺寸 Installation Dimensions											外形尺寸 Outline Dimensions									
		A	B	B1	C	D	E	F	G	H	K	X	AA	AB	AC	AD	BB	HA	HD 上出线 Top	HD 旁出线 Left/Right	LD	L
315S	2	508	406	—	216	65	140	18	58	315	28	84	120	630	620	530	570	45	845	745	257	1185
	4-8	508	406	—	216	80	170	22	71	315	28	84	120	630	620	530	570	45	845	745	257	1215
315ML	2	508	457	508	216	65	140	18	58	315	28	84	120	630	620	530	680	45	845	745	257	1295
	4-8	508	457	508	216	80	170	22	71	315	28	84	120	630	620	530	680	45	845	745	257	1325
315ML*	2	508	457	508	216	65	140	18	58	315	28	84	120	630	620	530	770	45	845	745	257	1385
	4-8	508	457	508	216	80	170	22	71	315	28	84	120	630	620	530	770	45	845	745	257	1415
355ML (国内)	2	610	560	630	254	75	140	20	67.5	355	28	68	120	730	700	600	750	52	960	845	284	1515
	4-8	610	560	630	254	95	170	25	86	355	28	68	120	730	700	600	750	52	960	845	284	1545
355ML (IEC)	2	610	560	630	254	80	170	22	71	355	28	68	120	730	700	600	750	52	960	845	284	1545
	4-8	610	560	630	254	100	210	28	90	355	28	68	120	730	700	600	750	52	960	845	284	1585

型号后缀*表示此规格需采用加长机座　　Longer housing used for type with *

OMT4系列(IP55)三相异步电动机
IE4 (CHINESE GRADE 2)

机械尺寸数据(OMT4) Outline&Installation Dimensions (OMT4) V1

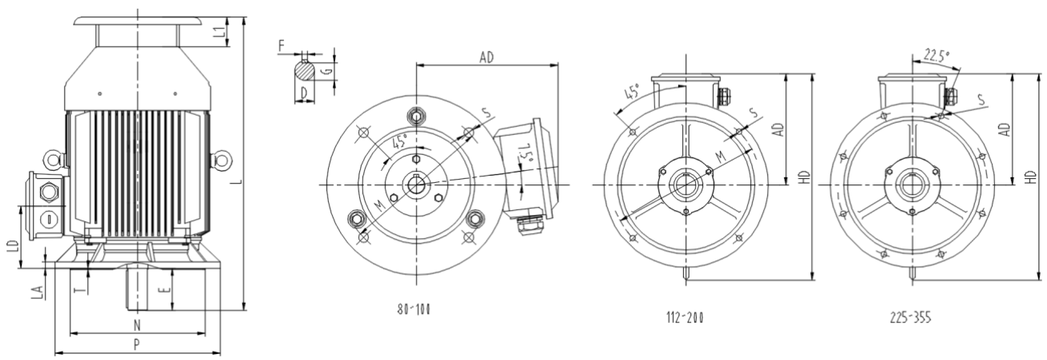

机座号 Frame Size	极 数 Pole	安装尺寸 Installation Dimensions									外形尺寸 Outline Dimensions						
		D	E	F	G	M	N	P	S	T	AC	AD	HD	LA	LD	L1	L
80	2-6	19	40	6	15.5	165	130	200	4-Φ12	3.5	176	160	-	12	76	45	350
90S	2-6	24	50	8	20	165	130	200	4-Φ12	3.5	176	165	-	12	75	45	400
90L	2-6	24	50	8	20	165	130	200	4-Φ12	3.5	176	165	-	12	75	45	430
100L	2-6	28	60	8	24	215	180	250	4-Φ15	4	206	180	-	13	83	45	480
160M、L	2-8	42	110	12	37	300	250	350	4-Φ19	5	315	260	485	15	146	55	710
160L*	2-8	42	110	12	37	300	250	350	4-Φ19	5	315	260	485	15	146	55	745
180M、L	2-8	48	110	14	42.5	300	250	350	4-Φ19	5	360	275	515	15	161	60	780
180L*	2-8	48	110	14	42.5	300	250	350	4-Φ19	5	360	275	515	15	161	60	840
200L	2-8	55	110	16	49	350	300	400	4-Φ19	5	400	310	580	17	186	75	855
200L*	2-8	55	110	16	49	350	300	400	4-Φ19	5	400	310	580	17	186	75	905
225S	4、8	60	140	18	53	400	350	450	8-Φ19	5	450	335	620	20	189	90	935
225M	2	55	110	16	49	400	350	450	8-Φ19	5	450	335	620	20	189	90	905
	4-8	60	140	18	53	400	350	450	8-Φ19	5	450	335	620	20	189	90	935
225M*	2	55	110	16	49	400	350	450	8-Φ19	5	450	335	620	20	189	90	970
	4-8	60	140	18	53	400	350	450	8-Φ19	5	450	335	620	20	189	90	1000
250M	2	60	140	18	53	500	450	550	8-Φ19	5	485	375	695	20	207	100	1015
	4-8	65	140	18	58	500	450	550	8-Φ19	5	485	375	695	20	207	100	1015
280S	2	65	140	18	58	500	450	550	8-Φ19	5	550	400	765	22	215	120	1120
	4-8	75	140	20	67.5	500	450	550	8-Φ19	5	550	400	765	22	215	120	1135
280M	2	65	140	18	58	500	450	550	8-Φ19	5	550	400	765	22	215	120	1175
	4-8	75	140	20	67.5	500	450	550	8-Φ19	5	550	400	765	22	215	120	1185

机座号 Frame Size	极 数 Pole	安装尺寸 Installation Dimensions									外形尺寸 Outline Dimensions						
		D	E	F	G	M	N	P	S	T	AC	AD	HD	LA	LD	L1	L
315S	2	65	140	18	58	600	550	660	8-Φ24	6	620	530	985	22	257	120	1305
	4-8	80	170	22	71	600	550	660	8-Φ24	6	620	530	985	22	257	120	1335
315ML	2	65	140	18	58	600	550	660	8-Φ24	6	620	530	985	22	257	120	1415
	4-8	80	170	22	71	600	550	660	8-Φ24	6	620	530	985	22	257	120	1445
315ML	2	65	140	18	58	600	550	660	8-Φ24	6	620	530	985	22	257	120	1505
	4-8	80	170	22	71	600	550	660	8-Φ24	6	620	530	985	22	257	120	1535
355ML (国内)	2	75	140	20	67.5	740	680	800	8-Φ24	6	700	600	1090	25	284	140	1655
	4-8	95	170	25	86	740	680	800	8-Φ24	6	700	600	1090	25	284	140	1685
355ML (IEC)	2	85	170	22	71	740	680	800	8-Φ24	6	700	600	1090	25	284	140	1685
	4-8	100	210	28	90	740	680	800	8-Φ24	6	700	600	1090	25	284	140	1725

型号后缀*表示此规格需采用加长机座　　Longer housing used for type with *

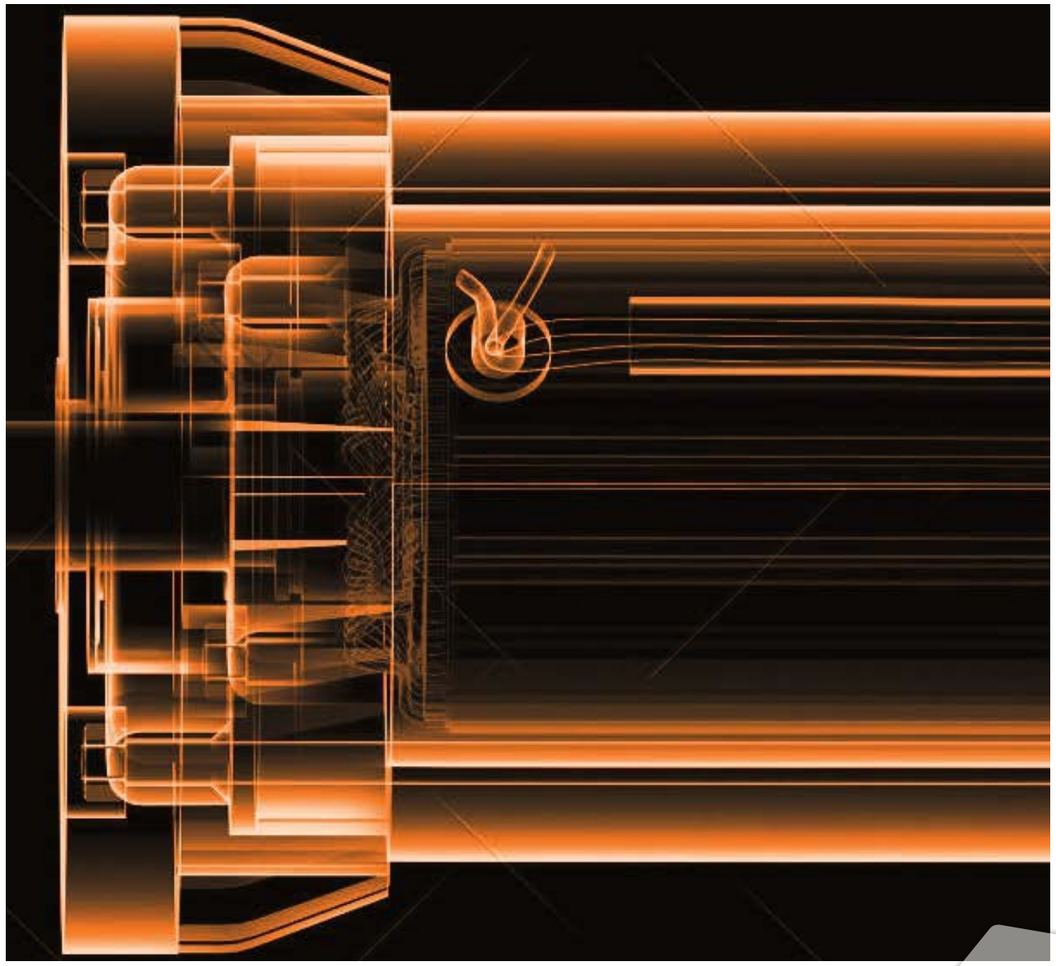

OMT4系列(IP55)三相异步电动机
IE4 (CHINESE GRADE 2)

机械尺寸数据(OMT4) Outline&Installation Dimensions (OMT4) B35

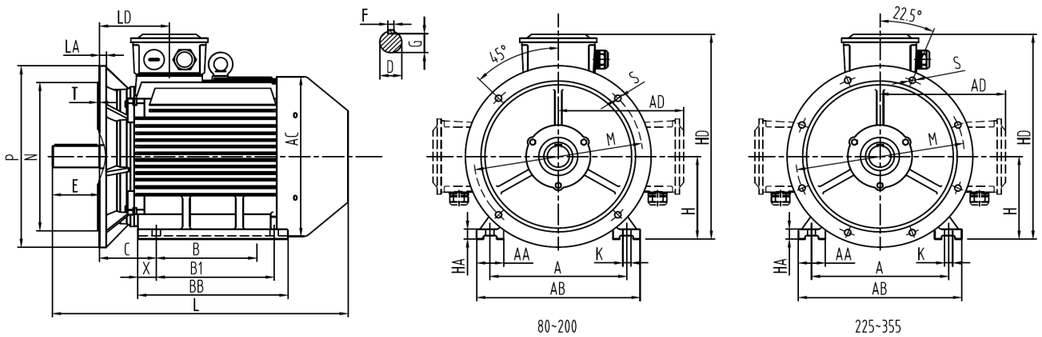

机座号 Frame Size	极数 Pole	安装尺寸 Installation Dimensions															外形尺寸 Outline Dimensions										
		A	B	B1	C	D	E	F	G	H	K	X	M	N	P	S	T	AA	AB	AC	AD	BB	HA	HD 上出线 Top	HD 旁出线 Left/Right	LA	LD	L
80	2-6	125	100	-	50	19	40	6	15.5	80	10	14	165	130	200	4-Φ12	3.5	35	176	160	160	130	10	235	175	12	76	305
90S	2-6	140	100	-	56	24	50	8	20	90	10	20	165	130	200	4-Φ12	3.5	40	176	165	165	180	12	245	180	12	75	355
90L	2-6	140	125	-	56	24	50	8	20	90	10	20	165	130	200	4-Φ12	3.5	40	176	165	165	210	12	245	180	12	75	385
100L	2-6	160	140	-	63	28	60	8	24	100	12	18	215	180	250	4-Φ15	4	40	206	180	180	235	14	275	250	13	83	435
160M、L	2-8	254	210	254	108	42	110	12	37	160	15	25	300	250	350	4-Φ19	5	65	315	315	260	305	20	420	385	15	146	655
160L*	2-8	254	-	254	108	42	110	12	37	160	15	25	300	250	350	4-Φ19	5	65	315	315	260	320	20	420	385	15	146	690
180M、L	2-8	279	241	279	121	48	110	14	42.5	180	15	35	300	250	350	4-Φ19	5	70	350	360	275	350	22	460	420	15	161	720
180L*	2-8	279	279	-	121	48	110	14	42.5	180	15	35	300	250	350	4-Φ19	5	70	350	360	275	350	22	460	420	15	161	780
200L	2-8	318	305	-	133	55	110	16	49	200	19	32	350	300	400	4-Φ19	5	70	390	400	310	370	25	510	465	17	186	780
200L*	2-8	318	305	-	133	55	110	16	49	200	19	32	350	300	400	4-Φ19	5	70	390	400	310	370	25	510	465	17	186	830
225S	4、8	356	286	311	149	60	140	18	53	225	19	46	400	350	450	8-Φ19	5	75	435	450	335	395	28	560	510	20	189	845
225M	2	356	311	-	149	55	110	16	49	225	19	46	400	350	450	8-Φ19	5	75	435	450	335	395	28	560	510	20	189	815
	4-8	356	286	311	149	60	140	18	53	225	19	46	400	350	450	8-Φ19	5	75	435	450	335	395	28	560	510	20	189	845
225M*	2	356	311	-	149	55	110	16	49	225	19	46	400	350	450	8-Φ19	5	75	435	450	335	395	28	560	510	20	189	880
	4-8	356	311	-	149	60	140	18	53	225	19	46	400	350	450	8-Φ19	5	75	435	450	335	395	28	560	510	20	189	910
250M	2	406	349	-	168	60	140	18	53	250	24	55	500	450	550	8-Φ19	5	80	485	485	375	445	30	625	570	20	207	915
	4-8	406	349	-	168	65	140	18	58	250	24	55	500	450	550	8-Φ19	5	80	485	485	375	445	30	625	570	20	207	915
280S	2	457	368	-	190	65	140	18	58	280	24	70	500	450	550	8-Φ19	5	85	545	550	400	485	35	680	645	22	215	1000
	4-8	457	368	-	190	75	140	20	67.5	280	24	70	500	450	550	8-Φ19	5	85	545	550	400	485	35	680	645	22	215	1015
280M	2	457	419	-	190	65	140	18	58	280	24	70	500	450	550	8-Φ19	5	85	545	550	400	536	35	680	645	22	215	1055
	4-8	457	419	-	190	75	140	20	67.5	280	24	70	500	450	550	8-Φ19	5	85	545	550	400	536	35	680	645	22	215	1065

机座号 Frame Size	极数 Pole	安装尺寸 Installation Dimensions															外形尺寸 Outline Dimensions										
		A	B	B1	C	D	E	F	G	H	K	X	M	N	P	S	T	AA	AB	AC	AD	BB	HA	HD 上出线 Top	HD 旁出线 Left/Right	LA	LD	L
315S	2	508	406	-	216	65	140	18	58	315	28	84	600	550	660	8-Φ24	6	120	630	620	530	570	45	845	745	22	257	1185
	4-8	508	406	-	216	80	170	22	71	315	28	84	600	550	660	8-Φ24	6	120	630	620	530	570	45	845	745	22	257	1215
315ML	2	508	457	508	216	65	140	18	58	315	28	84	600	550	660	8-Φ24	6	120	630	620	530	680	45	845	745	22	257	1295
	4-8	508	457	508	216	80	170	22	71	315	28	84	600	550	660	8-Φ24	6	120	630	620	530	680	45	845	745	22	257	1325
315ML	2	508	457	508	216	65	140	18	58	315	28	84	600	550	660	8-Φ24	6	120	630	620	530	770	45	845	745	22	257	1385
	4-8	508	457	508	216	80	170	22	71	315	28	84	600	550	660	8-Φ24	6	120	630	620	530	770	45	845	745	22	257	1415
355ML (国内)	2	610	560	630	254	75	140	20	67.5	355	28	68	740	680	800	8-Φ24	6	120	730	700	600	750	52	960	845	25	284	1515
	4-8	610	560	630	254	95	170	25	86	355	28	68	740	680	800	8-Φ24	6	120	730	700	600	750	52	960	845	25	284	1545
355ML (IEC)	2	610	560	630	254	80	170	22	71	355	28	68	740	680	800	8-Φ24	6	120	730	700	600	750	52	960	845	25	284	1545
	4-8	610	560	630	254	100	210	28	90	355	28	68	740	680	800	8-Φ24	6	120	730	700	600	750	52	960	845	25	284	1585

型号后缀*表示此规格需采用加长机座　　Longer housing used for type with *

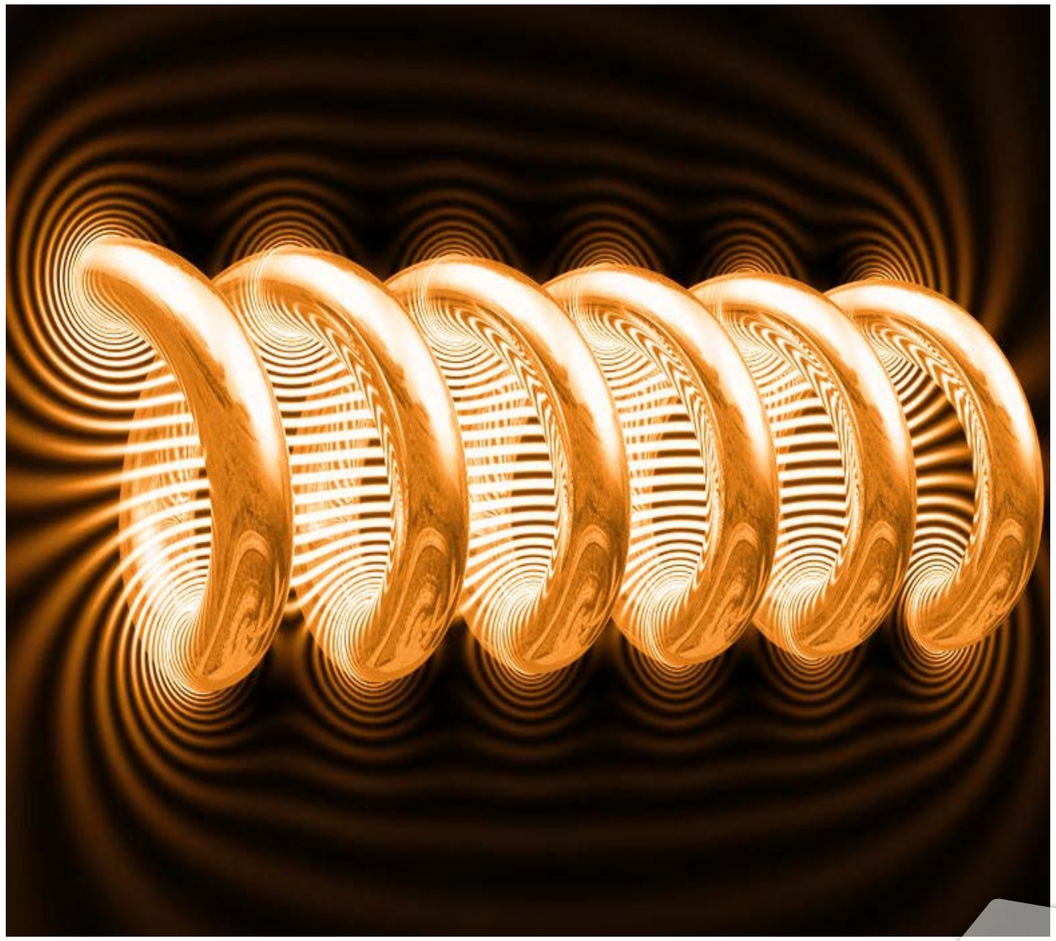

OMT4系列(IP55)三相异步电动机
IE4 (CHINESE GRADE 2)

机械尺寸数据(OMT4) Outline&Installation Dimensions (OMT4) B5

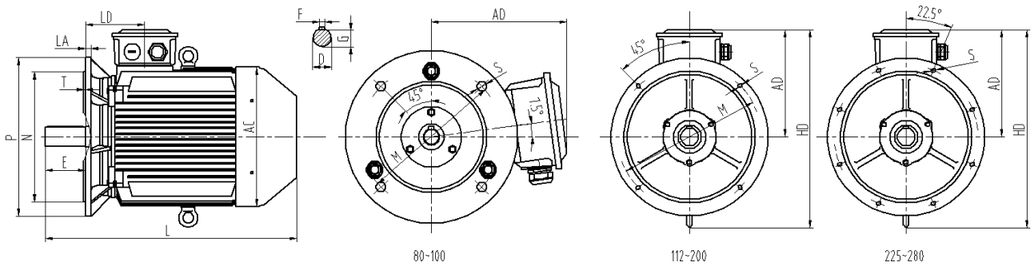

机座号 Frame Size	极数 Pole	安装尺寸 Installation Dimensions									外形尺寸 Outline Dimensions					
		D	E	F	G	M	N	P	S	T	AC	AD	HD	LA	LD	L
80	2-6	19	40	6	15.5	165	130	200	4-Φ12	3.5	176	160	-	12	76	305
90S	2-6	24	50	8	20	165	130	200	4-Φ12	3.5	176	165	-	12	75	355
90L	2-6	24	50	8	20	165	130	200	4-Φ12	3.5	176	165	-	12	75	385
100L	2-6	28	60	8	24	215	180	250	4-Φ15	4	206	180	-	13	83	435
160M、L	2-8	42	110	12	37	300	250	350	4-Φ19	5	315	260	485	15	146	655
160L*	2-8	42	110	12	37	300	250	350	4-Φ19	5	315	260	485	15	146	690
180M、L	2-8	48	110	14	42.5	300	250	350	4-Φ19	5	360	275	515	15	161	720
180L*	2-8	48	110	14	42.5	300	250	350	4-Φ19	5	360	275	515	15	161	780
200L	2-8	55	110	16	49	350	300	400	4-Φ19	5	400	310	580	17	186	780
200L*	2-8	55	110	16	49	350	300	400	4-Φ19	5	400	310	580	17	186	830
225S	4、8	60	140	18	53	400	350	450	8-Φ19	5	450	335	620	20	189	845
225M	2	55	110	16	49	400	350	450	8-Φ19	5	450	335	620	20	189	815
	4-8	60	140	18	53	400	350	450	8-Φ19	5	450	335	620	20	189	845
225M*	2	55	110	16	49	400	350	450	8-Φ19	5	450	335	620	20	189	880
	4-8	60	140	18	53	400	350	450	8-Φ19	5	450	335	620	20	189	910
250M	2	60	140	18	53	500	450	550	8-Φ19	5	485	375	695	20	207	915
	4-6	65	140	18	58	500	450	550	8-Φ19	5	485	375	695	20	207	915
280S	2	65	140	18	58	500	450	550	8-Φ19	5	550	400	765	22	215	1000
	4-6	75	140	20	67.5	500	450	550	8-Φ19	5	550	400	765	22	215	1015
280M	2	65	140	18	58	500	450	550	8-Φ19	5	550	400	765	22	215	1055
	4-6	75	140	20	67.5	500	450	550	8-Φ19	5	550	400	765	22	215	1065

型号后缀*表示此规格需采用加长机座　Longer housing used for type with *

OMM3、OMM4系列（IP55）三相异步电动机 IE3/IE4(3/2)

OMM3、OMM4 SERIES REMOVABLE FEET HIGH EFFICIENCY MOTORS (CHINESE GRADE 3/2)

功率范围（Power）：4-90KW；
机座范围（Frame）：H160-280。

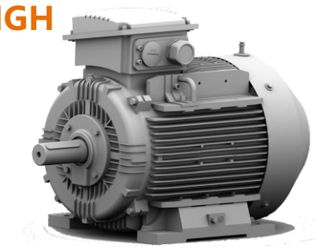

基本技术要求及特点

- 全封闭自扇冷却式三相异步电动机，设计符合IEC、GB等相关标准要求；
- 外壳材料全部为灰铸铁；
- 电动机效率符合GB18613-2020标准能效等级三级及IEC60034-30标准的IE4效率等级要求；
- 特定绕组设计，支持多种电压(50HZ或60HZ)；
- 可承受1.5倍额定电流2分钟(IEC60034-1)；
- 可选配防潮加热带(空间加热器)；
- 可选配PTC或PT100等热敏元件进行绕组或轴承热保护。
- **因底脚可拆卸或安装,订购时需注意：**
- B8安装方式需要在订货时特别提出;
- 应用环境有持续振动时，使用该系列电机时，需要在底脚固定螺栓处加涂螺纹胶;
- 如客户更改接线盒位置，建议订购毛坯底脚。与机座合适位置固定后加工底脚平面以确保100%符合尺寸公差。

Technical characteristics

- Totally enclosed fan-cooled three-phase asynchronous motor are designed according to IEC,GB and relevant standards;
- Housings are made of gray cast iron with new structure design; Removable feet design, easy to adjust the mounting position;
- Motor efficiency reaches grade 2 or grade 3 in GB18613-2020; and the IE4 or IE3 efficiency in IEC60034-30;
- Special winding design support multiple voltages (50HZ or 60HZ);
- Withstand 1.5 times rated current for 2 minutes (IEC60034-1);
- Optional heater for moisture-proof;
- PTC or PT100 can be selected for thermal protection of windings or bearings.;
- **Attention to following points when ordering:**
- B8 installation needs to be specified when ordering;
- Screw glue should be used to the fix bolts on the feet when continuous vibration in application;
- When changing the direction of terminal box, it's advised to order blank feet, and process the feet side after fixing with housing on suitable position to fully meet the tolerance of dimensions.

高压标准系列电机
HIGH VOLTAGE SERIES MOTORS

OHT4系列高压三相异步电动机(IC411)

OHT4 SERIES HIGH VOLTAGE THREE-PHASE INDUCTION MOTORS

功率范围（Power）：160-1600KW；
机座范围（Frame）：H355-560。

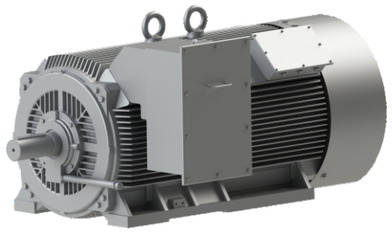

基本技术要求及特点

- 防护等级：IP55;
- 冷却方式：IC411
- 安装方式：B3
- 绝缘等级：F级，温升按B级考核
- 工作制：S1；
- 电压等级：6000V,10000V
- 频率：50Hz(可派生60Hz，或指定的频率)
- 满足国标二级能效要求(根据客户要求，可订制一级能效电机)
- 符合JB/T10444《Y2、YX2系列高压三相异步电动机技术条件及能效分级》标准。

Technical characteristics

- Protection class: IP55;
- Cooling method: IC411;
- Installation method: B3;
- Insulation class: F class, temperature rise is assessed according to B class;
- Working system: S1;
- Voltage level: 6000V, 10000V;
- Frequency: 50Hz (60Hz can be derived, or specified frequency);
- Meet the second-level energy efficiency requirements of the national standard (according to customer requirements, the first-level energy-efficiency motor can be customized);
- The motor complies with the standard of JB/T10444 "Y2, YX2 series high-voltage three-phase asynchronous motor technical conditions and energy efficiency classification".

使用环境

- 海拔不超过1000m
- 最高环境空气温度随季节而变化，但不超过40℃
- 环境场所：无可燃性气体、无粉尘
- 可派生适应户外环境用“W”型、湿热带环境用“TH”型、户外湿热带环境用“WTH”型、户外中度防腐“WF1”型等；
- 电动机的电源：允许电压波动±5%，频率波动±2%，电压和频率合并波动±5%；
- 机座和端盖采用树脂砂造型，美观大方；电动机设置不停机注排油装置；
- 可根据客户需求设置不同型号和规格的轴承测温、绕组测温、防潮加热带等。

Environment

- The altitude does not exceed 1000m;
- The maximum ambient air temperature varies with the season, but does not exceed 40°C;
- Environmental place: no flammable gas, no dust;
- It can be derived to adapt to the "W" type for outdoor environment, "TH" type for humid tropical environment, "WTH" type for outdoor humid tropical environment, and "WF1" type for outdoor moderate anti-corrosion;
- Electric power supply: allowable voltage fluctuation ±5%, frequency fluctuation ±2%, combined voltage and frequency fluctuation ±5%;
- The base and end cover of the motor are made of resin sand, which is beautiful and elegant;
- The motor is equipped with a non-stop oil injection and discharge device;
- The motor can be set with different types and specifications of bearing temperature measurement, winding temperature measurement, moisture-proof heating belt, etc. according to customer needs.

OHT4系列高压(6kV、6.6kV)三相异步电动机(IC411)

OHT4 SERIES HIGH VOLTAGE (6kV、6.6kV) THREE-PHASE INDUCTION MOTORS(IC411)

产品的电气性能数据（Technical Data）

电机型号 Motor Type	功率 Rated Power		额定转速 Rated Speed	效率 Efficiency	功率因数 Power Factor	电流 Current			转矩 Torque			转动惯量 Moment of inertia(J)	重量 Approx WT
						Full Load 6kv	Full Load 6.6kv	Locked Rotor	Full Load	Locked Rotor	Pull Out		
	KW	(HP)	RPM	%		A	A	%FLC	Kg-m	%FLT	%FLC	Kg-m²	Kg
OHT4-355F1-02P	185	250	2980	93.0	84	22.8	20.7	700	60	70	200	2.6	1900
OHT4-355F2-02P	200	270	2980	93.2	84	24.6	22.3	700	65	70	200	2.8	2000
OHT4-355F3-02P	220	295	2980	93.3	84	27.0	24.6	700	72	70	200	3.0	2100
OHT4-355F4-02P	250	335	2980	93.4	84	30.7	27.9	700	82	70	200	3.3	2200
OHT4-355F5-02P	280	375	2980	93.6	86	33.5	30.4	700	92	70	200	3.5	2350
OHT4-400F1-02P	315	420	2980	93.9	86	37.5	34.1	700	103	70	200	5.0	2900
OHT4-400F2-02P	355	475	2980	94.1	86	42.2	38.4	700	116	70	200	5.5	3000
OHT4-400F3-02P	400	535	2980	94.5	86	47.4	43.1	700	131	70	200	6.0	3100
OHT4-400F4-02P	450	605	2980	94.7	86	53.2	48.3	700	147	70	200	7.0	3200
OHT4-450F1-02P	500	670	2982	95.0	87	58.2	52.9	700	163	70	200	11	3500
OHT4-450F2-02P	560	750	2982	95.1	87	65.1	59.2	700	183	70	200	12	3600
OHT4-450F3-02P	630	845	2982	95.2	87	73.2	66.5	700	206	70	200	13	3700
OHT4-450F4-02P	710	950	2982	95.3	87	82.4	74.9	700	232	70	200	14	3850
OHT4-500F1-02P	800	1070	2982	95.6	88	91.5	83.2	700	261	70	200	17	5780
OHT4-500F2-02P	900	1205	2982	95.7	88	102.8	93.5	700	294	70	200	19	6050
OHT4-500F3-02P	1000	1340	2982	95.8	88	114.1	103.8	700	327	70	200	21.0	6320
OHT4-500F4-02P	1120	1500	2982	95.9	88	127.7	116.1	700	366	70	200	23	6600
OHT4-560F1-02P	1250	1680	2985	96.1	89	140.6	127.9	700	408	70	200	24.0	8400
OHT4-560F2-02P	1400	1880	2985	96.2	89	157.3	143.0	700	457	70	200	30	8800
OHT4-560F3-02P	1600	2140	2985	96.3	89	179.6	163.3	700	522	70	200	33.0	9200
OHT4-355F1-04P	185	250	1485	93.4	84	22.7	20.6	650	121	80	200	6.0	1900
OHT4-355F2-04P	200	270	1485	93.6	84	24.5	22.3	650	131	80	200	7.0	2000
OHT4-355F3-04P	220	295	1485	93.7	84	26.9	24.5	650	144	80	200	8.0	2100
OHT4-355F4-04P	250	335	1485	93.8	84	30.5	27.8	650	164	80	200	9.0	2200
OHT4-355F5-04P	280	375	1485	93.9	84	34.2	31.1	650	184	80	200	10	2300
OHT4-400F1-04P	315	420	1485	94.1	85	37.9	34.5	650	207	80	200	11	3000
OHT4-400F2-04P	355	475	1485	94.3	85	42.6	38.7	650	233	80	200	12	3100
OHT4-400F3-04P	400	535	1485	94.4	85	48.0	43.6	650	262	80	200	13	3200

OHT4系列高压(6kV、6.6kV)三相异步电动机(IC411)

OHT4 SERIES HIGH VOLTAGE (6kV、6.6kV) THREE-PHASE INDUCTION MOTORS(IC411)

产品的电气性能数据(Technical Data)

电机型号 Motor Type	功率 Rated Power		额定转速 Rated Speed	效率 Efficiency	功率因数 Power Factor	电流 Current			转矩 Torque			转动惯量 Moment of inertia(J)	重量 Approx WT
						Full Load 6kv	Full Load 6.6kv	Locked Rotor	Full Load	Locked Rotor	Pull Out		
	KW	(HP)	RPM	%		A	A	%FLC	Kg-m	%FLT	%FLC	Kg-m²	Kg
OHT4-400F4-04P	450	605	1485	94.6	85	53.9	49.0	650	295	80	200	14	3300
OHT4-450F1-04P	500	670	1485	94.8	86	59.0	53.7	650	328	80	200	22	3600
OHT4-450F2-04P	560	750	1485	95	86	66.0	60.0	650	367	80	200	24	3700
OHT4-450F3-04P	630	845	1485	95.2	86	74.0	67.3	650	413	80	200	26	3800
OHT4-450F4-04P	710	950	1485	95.4	86	83.3	75.7	650	466	80	200	28	3950
OHT4-500F1-04P	800	1070	1488	95.5	86	93.7	85.2	650	524	80	200	41	5820
OHT4-500F2-04P	900	1210	1488	95.6	86	105.3	95.8	650	589	80	200	44	6100
OHT4-500F3-04P	1000	1340	1488	95.7	86	116.9	106.3	650	655	80	200	47	6280
OHT4-500F4-04P	1120	1505	1488	95.8	86	130.8	118.9	650	733	80	200	50	6420
OHT4-560F1-04P	1250	1680	1488	96	87	144.0	130.9	650	819	70	200	70	8020
OHT4-560F2-04P	1400	1880	1488	96	87	161.3	146.6	650	917	70	200	74	8390
OHT4-560F3-04P	1600	2140	1488	96.1	87	184.2	167.4	650	1048	70	200	78	8750
OHT4-355F1-06P	160	215	985	93	80	20.7	18.8	600	158	80	200	9	2200
OHT4-355F2-06P	185	250	985	93.2	80	23.9	21.7	600	183	80	200	10	2300
OHT4-355F3-06P	200	270	985	93.4	80	25.8	23.4	600	198	80	200	11	2400
OHT4-400F1-06P	220	295	988	93.5	82	27.6	25.1	600	217	80	200	14	2900
OHT4-400F2-06P	250	335	988	93.7	82	31.3	28.5	600	247	80	200	16	3000
OHT4-400F3-06P	280	375	988	93.9	82	35.0	31.8	600	276	80	200	18	3200
OHT4-400F4-06P	315	420	988	94.2	82	39.2	35.7	600	311	80	200	20	3400
OHT4-450F1-06P	355	475	988	94.4	83	43.6	39.6	600	350	80	200	28	3500
OHT4-450F2-06P	400	535	988	94.4	83	49.1	44.7	600	395	80	200	30	3600
OHT4-450F3-06P	450	605	988	94.7	83	55.1	50.1	600	444	80	200	32	3700
OHT4-450F4-06P	500	570	988	95.0	83	61.0	55.5	600	493	80	200	34	3820
OHT4-500F1-06P	560	750	990	95.1	83	68.3	62.1	600	551	80	200	54	5610
OHT4-500F2-06P	630	845	990	95.2	83	76.7	69.7	600	620	80	200	58	5790
OHT4-500F3-06P	710	950	990	95.4	83	86.3	78.4	600	699	80	200	62	6010
OHT4-500F4-06P	800	1070	990	95.5	83	97.1	88.3	600	787	80	200	66	6230
OHT4-560F1-06P	900	1210	990	95.6	84	107.8	98.0	600	886	70	200	94	7650
OHT4-560F2-06P	1000	1340	990	95.7	84	119.7	108.8	600	984	70	200	102	7950
OHT4-560F3-06P	1120	1500	990	95.8	84	133.9	121.8	600	1102	70	200	110	8250
OHT4-560F4-06P	1250	1680	990	96.0	84	149.2	135.6	600	1230	70	200	118	8550
OHT4-400F1-08P	160	215	738	92.9	76	21.8	19.8	550	211	80	200	15	3000
OHT4-400F2-08P	185	250	738	93.1	76	25.2	22.9	550	244	80	200	16	3100
OHT4-400F3-08P	200	270	738	93.3	77	26.8	24.4	550	264	80	200	18	3200

OHT4系列高压(6kV、6.6kV)三相异步电动机(IC411)

OHT4 SERIES HIGH VOLTAGE (6kV、6.6kV) THREE-PHASE INDUCTION MOTORS(IC411)

产品的电气性能数据(Technical Data)

电机型号 Motor Type	功率 Rated Power		额定转速 Rated Speed	效率 Efficiency	功率因数 Power Factor	电流 Current			转矩 Torque			转动惯量 Moment of inertia(J)	重量 Approx WT
						Full Load 6kv	Full Load 6.6kv	Locked Rotor	Full Load	Locked Rotor	Pull Out		
	KW	(HP)	RPM	%		A	A	%FLC	Kg-m	%FLT	%FLC	Kg-m²	Kg
OHT4-400F4-08P	220	295	738	93.4	77	29.4	26.8	550	290	80	200	20	3300
OHT4-450F1-08P	250	335	740	93.5	78	33.0	30.0	550	329	80	200	28	3500
OHT4-450F2-08P	280	375	740	93.7	78	36.9	33.5	550	369	80	200	30	3600
OHT4-450F3-08P	315	420	740	93.9	78	41.4	37.6	550	415	80	200	32	3700
OHT4-450F4-08P	355	475	740	94.0	78	46.6	42.4	550	467	80	200	34	3820
OHT4-500F1-08P	400	535	742	94.2	79	51.7	47.0	550	525	80	200	54	5250
OHT4-500F2-08P	450	605	742	94.3	79	58.1	52.8	550	591	80	200	58	5490
OHT4-500F3-08P	500	670	742	94.8	80	63.4	57.7	550	657	80	200	62	5750
OHT4-500F4-08P	560	750	742	94.9	80	71.0	64.5	550	735	80	200	66	6020
OHT4-560F1-08P	630	845	745	95.0	81	78.8	71.6	550	824	70	200	96	7000
OHT4-560F2-08P	710	950	745	95.0	81	88.8	80.7	550	929	70	200	105	7350
OHT4-560F3-08P	800	1070	745	95.2	81	99.8	90.8	550	1046	70	200	110	7700
OHT4-560F4-08P	900	1210	745	95.3	81	112.2	102	550	1177	70	200	116	8100

OHT4系列高压(10kV、11kV)三相异步电动机(IC411)

OHT4 SERIES HIGH VOLTAGE (10kV、11kV) THREE-PHASE INDUCTION MOTORS(IC411)

产品的电气性能数据(Technical Data)

电机型号 Motor Type	功率 Rated Power		额定转速 Rated Speed	效率 Efficiency	功率因数 Power Factor	电流 Current			转矩 Torque			转动惯量 Moment of inertia(J)	重量 Approx WT
						Full Load 10kV	Full Load 11kV	Locked Rotor	Full Load	Locked Rotor	Pull Out		
	KW	(HP)	RPM	%		A	A	%FLC	Kg-m	%FLT	%FLC	Kg-m²	Kg
OHT4-400F1-02P	220	295	2980	93.3	84	16.2	14.7	700	72	70	200	5	2900
OHT4-400F2-02P	250	335	2980	93.4	84	18.4	16.7	700	82	70	200	5.5	3000
OHT4-400F3-02P	280	375	2980	93.6	85	20.3	18.5	700	92	70	200	6	3100
OHT4-400F4-02P	315	420	2980	93.9	85	22.8	20.7	700	103	70	200	7	3200
OHT4-450F1-02P	355	475	2982	94.1	86	25.3	23.0	700	116	70	200	11	3500
OHT4-450F2-02P	400	535	2982	94.5	86	28.4	25.8	700	131	70	200	12	3600
OHT4-450F3-02P	450	605	2982	94.7	86	31.9	29.0	700	147	70	200	13	3700
OHT4-450F4-02P	500	670	2982	95	86	35.3	32.1	700	163	70	200	14	3850
OHT4-500F1-02P	560	750	2985	95.1	87	39.1	35.5	700	183	70	200	15	5500
OHT4-500F2-02P	630	845	2985	95.2	87	43.9	39.9	700	206	70	200	17	5780
OHT4-500F3-02P	710	950	2985	95.3	87	49.4	44.9	700	232	70	200	19	6050
OHT4-500F4-02P	800	1070	2985	95.6	88	54.9	49.9	700	261	70	200	21	6320
OHT4-500F5-02P	900	1210	2985	95.7	88	61.7	56.1	700	294	70	200	23	6600
OHT4-560F1-02P	900	1210	2985	95.7	88	61.7	56.1	700	294	70	200	26	8200
OHT4-560F2-02P	1000	1340	2985	95.8	88	68.5	62.3	700	327	70	200	30	8650
OHT4-560F3-02P	1120	1500	2985	95.9	88	76.6	69.6	700	366	70	200	34	9100
OHT4-560F4-02P	1250	1680	2985	96	88	85.4	77.6	700	408	70	200	30	9500
OHT4-400F1-04P	220	295	1482	93.7	84	16.1	14.7	650	145	80	200	11	3000
OHT4-400F2-04P	250	335	1482	93.8	84	18.3	16.7	650	164	80	200	12	3100
OHT4-400F3-04P	280	375	1482	93.9	84	20.5	18.6	650	184	80	200	13	3200
OHT4-400F4-04P	315	420	1482	94.1	84	23.0	20.9	650	207	80	200	14	3300
OHT4-450F1-04P	355	475	1485	94.3	85	25.6	23.2	650	233	80	200	20	3500
OHT4-450F2-04P	400	535	1485	94.4	85	28.8	26.2	650	262	80	200	22	3600
OHT4-450F3-04P	450	605	1485	94.6	85	32.3	29.4	650	295	80	200	24	3700
OHT4-450F4-04P	500	670	1485	94.8	86	35.4	32.2	650	328	80	200	26	3800
OHT4-450F5-04P	560	750	1485	95.0	86	39.6	36.0	650	367	80	200	28	3950
OHT4-500F1-04P	630	845	1488	95.2	86	44.4	40.4	650	413	80	200	41	5820
OHT4-500F2-04P	710	950	1488	95.4	86	50	45.4	650	465	80	200	44	6100
OHT4-500F3-04P	800	1070	1488	95.5	87	55.6	50.5	650	524	80	200	47	6280

OHT4系列高压(10kV、11kV)三相异步电动机(IC411)

OHT4 SERIES HIGH VOLTAGE (10kV、11kV) THREE-PHASE INDUCTION MOTORS(IC411)

产品的电气性能数据(Technical Data)

电机型号 Motor Type	功率 Rated Power		额定转速 Rated Speed	效率 Efficiency	功率因数 Power Factor	电流 Current			转矩 Torque			转动惯量 Moment of inertia(J)	重量 Approx WT
						Full Load 10kV	Full Load 11kV	Locked Rotor	Full Load	Locked Rotor	Pull Out		
	KW	(HP)	RPM	%		A	A	%FLC	Kg-m	%FLT	%FLC	Kg-m²	Kg
OHT4-500F4-04P	900	1210	1488	95.6	87	62.5	56.8	650	589	80	200	50	6420
OHT4-560F1-04P	1000	1340	1488	95.7	86	70.2	63.8	650	655	70	200	70	8020
OHT4-560F2-04P	1120	1500	1488	95.8	86	78.5	71.4	650	733	70	200	74	8390
OHT4-560F3-04P	1250	1680	1488	96	87	86.4	78.6	650	819	70	200	78	8750
OHT4-560F4-04P	1400	1880	1488	96	87	96.8	88.0	650	917	70	200	82	9100
OHT4-450F1-06P	220	295	985	93.5	82	16.6	15.1	600	218	80	200	26	3400
OHT4-450F2-06P	250	335	985	93.7	82	18.8	17.1	600	247	80	200	28	3500
OHT4-450F3-06P	280	375	985	93.9	82	21.0	19.1	600	277	80	200	30	3600
OHT4-450F4-06P	315	420	985	94.2	82	23.5	21.4	600	312	80	200	32	3700
OHT4-450F5-06P	355	475	985	94.4	82	26.5	24.1	600	351	80	200	34	3820
OHT4-500F1-06P	400	535	985	94.4	83	29.5	26.8	600	396	80	200	50	5450
OHT4-500F2-06P	450	605	988	94.7	83	33.1	30.0	600	444	80	200	54	5610
OHT4-500F3-06P	500	670	988	95.0	83	36.6	33.3	600	493	80	200	58	5790
OHT4-500F4-06P	560	750	990	95.1	83	41.0	37.2	600	551	80	200	62	6010
OHT4-500F5-06P	630	845	990	95.2	83	46.0	41.8	600	620	80	200	66	6230
OHT4-560F1-06P	710	950	992	95.4	83	51.8	47.1	600	697	70	200	87	7400
OHT4-560F2-06P	800	1070	992	95.5	83	58.3	53.0	600	786	70	200	84	7650
OHT4-560F3-06P	900	1210	992	95.6	84	64.7	58.8	600	884	70	200	102	7950
OHT4-560F4-06P	1000	1340	992	95.7	84	71.8	65.3	600	982	70	200	110	8250
OHT4-560F5-06P	1120	1500	992	95.8	84	80.4	73.1	600	1100	70	200	118	8550
OHT4-450F1-08P	220	295	740	93.4	78	17.4	15.9	550	290	80	200	30	3600
OHT4-450F2-08P	250	335	740	93.5	78	19.8	18.0	550	329	80	200	32	3700
OHT4-450F3-08P	280	375	740	93.7	78	22.1	20.1	550	369	80	200	34	3820
OHT4-500F1-08P	315	420	742	93.9	78	24.8	22.6	550	414	80	200	54	5250
OHT4-500F2-08P	355	475	742	94.0	78	28.0	25.4	550	466	80	200	58	5490
OHT4-500F3-08P	400	535	742	94.2	79	31.0	28.2	550	525	80	200	62	5750
OHT4-500F4-08P	450	605	742	94.3	79	34.9	37.1	550	591	80	200	66	6020
OHT4-560F1-08P	500	670	745	94.8	80	38.1	34.6	550	654	70	200	88	6650
OHT4-560F2-08P	560	750	745	94.9	80	42.6	38.7	550	733	70	200	96	7000
OHT4-560F3-08P	630	845	745	95.0	81	47.3	43.0	550	824	70	200	105	7350
OHT4-560F4-08P	710	950	745	95.0	81	53.3	48.4	550	929	70	200	110	7700
OHT4-560F5-08P	800	1070	745	95.2	81	59.9	54.5	550	1046	70	200	116	8100

OHT4系列高压三相异步电动机(IC411)

OHT4 SERIES HIGH VOLTAGE THREE-PHASE INDUCTION MOTORS(IC411)

机械尺寸数据（Outline&Installation Dimensions）

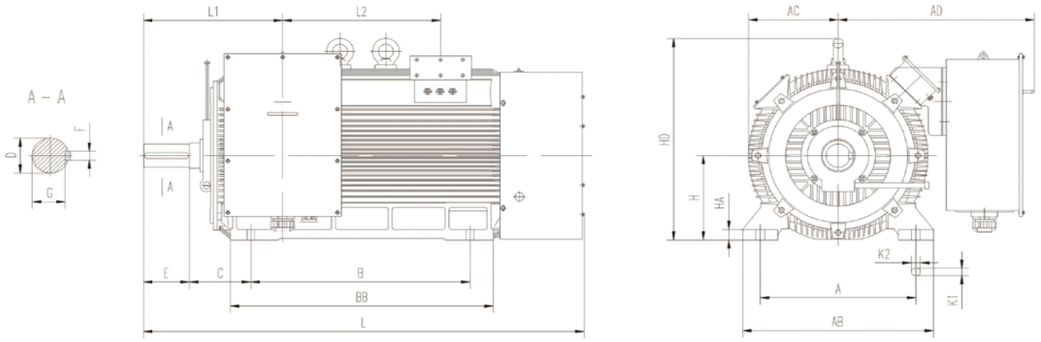

机座号 Frame	极 数 unting Dim	安装尺寸 Installation Dimensions													
		A	B	C	D		E	F		G		H		K1		K2
355	2	630±1.4	900±1.4	254±4	75	+0.035 +0.013	140±0.5	20	0 -0.052	67.5	0 -0.2	355	0 -1	28	+0.52 0	35
355	4～6	630±1.4	900±1.4	254±4	100	+0.035 +0.013	210±0.57	28	0 -0.052	90	0 -0.2	355	0 -1	28	+0.52 0	35
400	2	710±1.75	1000±1.75	280±4	85	+0.035 +0.013	170±0.5	22	0 -0.052	76	0 -0.2	400	0 -1	35	+0.62 0	42
400	4～8	710±1.75	1000±1.75	280±4	110	+0.035 +0.013	210±0.57	28	0 -0.052	100	0 -0.2	400	0 -1	35	+0.62 0	42
450	2	800±1.75	1120±1.75	280±4	95	+0.035 +0.013	170±0.5	25	0 -0.052	86	0 -0.2	450	0 -1	35	+0.62 0	64
450	4	800±1.75	1120±1.75	280±4	120	+0.035 +0.013	210±0.57	32	0 -0.062	109	0 -0.2	450	0 -1	35	+0.62 0	64
450	6～8	800±1.75	1120±1.75	280±4	130	+0.04 +0.015	250±0.57	32	0 -0.062	119	0 -0.2	450	0 -1	35	+0.62 0	64
500	4	900±2.1	1250±2.1	315±4	130	+0.04 +0.015	250±0.57	32	0 -0.062	119	0 -0.2	500	0 -1	42	+0.62 0	52
500	6～8	900±2.1	1250±2.1	315±4	140	+0.04 +0.015	250±0.57	36	0 -0.062	128	0 -0.3	500	0 -1	42	+0.62 0	52
560	4	1000±2.1	1400±2.1	355±4	150	+0.04 +0.015	250±0.57	36	0 -0.062	138	0 -0.3	560	0 -1	42	+0.62 0	52
560	6～8	1000±2.1	1400±2.1	355±4	160	+0.04 +0.015	300±0.65	40	0 -0.062	147	0 -0.3	560	0 -1	42	+0.62 0	52

机座号 Frame	极 数 unting Dim	外形尺寸 Outline Dimensions								
		AC	AD	AB	BB	HA	HD	L1	L2	L
355	2	370	780	790	1110	50	830	514	680	1740
355	4~8	370	780	790	1110	50	830	584	680	1830
400	2	420	900	870	1200	50	960	595	712	2020
400	4~8	420	900	870	1200	50	960	635	712	2060
450	2	450	930	950	1340	60	1085	651	785	2150
450	4	450	930	950	1340	60	1085	691	785	2180
450	6~8	450	930	950	1340	60	1085	731	785	2220
500	4~8	525	990	1080	1490	65	1200	791	865	2410
560	4	605	1050	1170	1680	76	1380	817	970	2600
560	6~8	605	1050	1170	1680	76	1380	867	970	2650

OHT4系列高压三相异步电动机(IC411)

OHT4 SERIES HIGH VOLTAGE THREE-PHASE INDUCTION MOTORS(IC411)

机械尺寸数据（Outline&Installation Dimensions）

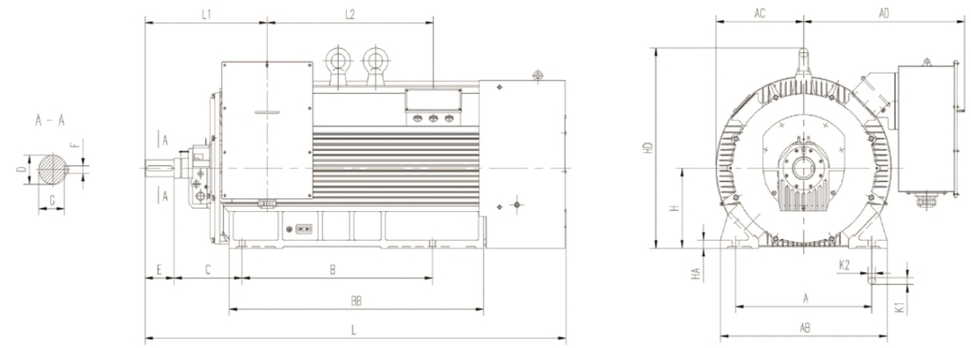

机座号 Frame	极 数 unting Dim	安装尺寸 Installation Dimensions													
		A	B	C	D		E	F		G		H		K1		K2
500	2	900±2.1	1250±2.1	480±4	110	+0.035 +0.013	210±0.57	28	0 -0.052	100	0 -0.2	500	0 -1	42	+0.62 0	52
560	2	1000±2.1	1400±2.1	530±4	130	+0.04 +0.015	250±0.57	32	0 -0.060	119	0 -0.2	560	0 -1	42	+0.62 0	52

机座号 Frame	极 数 unting Dim	外形尺寸 Outline Dimensions								
		AC	AD	AB	BB	HA	HD	L1	L2	L
500	2	525	990	1080	1490	65	1200	916	865	2500
560	2	605	1050	1170	1680	76	1380	992	970	2700

OAA3、OAA4系列高压三相异步电动机(IC611)

OAA3、OAA4 SERIES HIGH VOLTAGE THREE-PHASE INDUCTION MOTORS

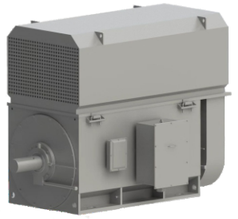

功率范围（Power）：185-3150KW；
机座范围（Frame）：H355-630。

基本技术要求及特点

- 防护等级：IP55
- 冷却方式：IC611(可派生IC616、IC666)
- 安装形式：B3 (可派生B35、V10)
- 绝缘等级：F级，温升按B级考核
- 工作制：S1
- 电压等级：6000V, 10000V;（可派生客户指定的电压）
- 频率：50Hz（可派生60Hz，或指定的频率）
- OAA4系列电动机符合标准：JB/T12730(6kV)、JB/T12729(10kV)中二级能效的要求(即YXKK系列)
- OAA3系列电动机符合标准：JB/T12730(6kV)、JB/T12729(10kV)中三级能效的要求(即YKK系列)

使用环境

- 海拔不超过1000m(可派生指定海拔高度使用的环境）；
- 环境空气温度：-20℃至+40℃；
- 环境空气湿度：月平均最高相对湿度为90%，同时月平均温度不高于25℃；
- 环境场所：无可燃性气体、无粉尘场所（可派生适应户外环境用"W"型，湿热带环境用"TH"型,户外湿热带环境用"WTH"型，户外中度防腐"WF1"型等）

电源

- 允许电压波动±5%，频率波动±2%，电压和频率合并波动±5%。

结构

- 电动机采用钢板焊接结构，美观大方；
- 电动机设置不停机注排油装置；
- 电动机设置轴承测温pt100；绕组测温pt100等附件；
- 采用优质进口滚动轴承结构（H500/H560/H630-2P电机采用优质的滑动轴承）维修、安装方便；
- 定子绕组经VPI处理，具有良好的电气性能和防潮能力。

Technical characteristics

- Protection class: IP55;
- Cooling method: IC611 (IC616, IC666 can be derived);
- Installation form: B3 (B35, V10 can be derived);
- Insulation class: F class, the temperature rise is assessed according to B class;
- Working system: S1;
- Voltage class: 6000V, 10000V; (customer-specified voltage can be derived);
- Frequency: 50Hz (60Hz can be derived, or specified frequency);
- OAA4 series motors meet the standard Requirements for secondary energy efficiency in JB/T12730 (6kV) and JB/T12729 (10kV) (YXKK series);
- OAA3 series motors meet the standard Requirements for three-level energy efficiency in JB/T12730 (6kV) and JB/T12729 (10kV) (YKK series).

Environment

- The altitude does not exceed 1000m (the environment for use at the specified altitude can be derived);
- Ambient air temperature:-20°C to +40°C;
- Ambient air humidity:the monthly average maximum relative humidity is 90%, and the monthly average temperature is not higher than 25℃;
- Environmental place: no flammable gas, no dust place ("W" type for outdoor environment, "TH" type for humid tropical environment, "WTH" type for outdoor humid tropical environment, outdoor moderate anticorrosion "WF1" type Wait).

Power supply

- Allowable voltage fluctuation ±5%, frequency fluctuation ±2%, combined voltage and frequency fluctuation ±5%.

Structure

- The motor adopts steel plate welding structure, which is beautiful and elegant;
- The motor is equipped with a non-stop oil injection and discharge device;
- Motor set bearing temperature measurement pt100; winding temperature measurement pt100 and other accessories;
- Adopt high-quality imported rolling bearing structure (H500/H560/H630-2P motor adopts high-quality sliding bearing), which is convenient for maintenance and installation;
- The stator winding is treated with VPI and has good electrical performance and moisture resistance.

OAA3系列高压(6kV、6.6kV)三相异步电动机(IC611)

OAA3 SERIES HIGH VOLTAGE(6kV、6.6kV) THREE-PHASE INDUCTION MOTORS(IC611)

电机型号 Motor Type	功率 Rated Power		额定转速 Rated Speed	效率 Efficiency	功率因数 Power Factor	电流 Current			转矩 Torque			转动惯量 Moment of inertia(J)	重量 Approx WT
						Full Load 6kV	Full Load 6.6kV	Locked Rotor	Full Load	Locked Rotor	Pull Out		
	KW	(HP)	RPM	%	%	A	A	%FLC	Kg-m	%FLT	%FLC	Kg-m²	Kg
OAA3-355F1-02P	220	295	2975	91.7	85	27.2	24.7	700	72	60	180	3.8	2190
OAA3-355F2-02P	250	335	2975	91.8	85	30.8	28.0	700	82	60	180	3.8	2250
OAA3-355F3-02P	280	375	2975	92.0	85	34.5	31.3	700	92	60	180	4.1	2320
OAA3-355F4-02P	315	420	2975	92.4	85	38.6	35.1	700	103	60	180	4.4	2460
OAA3-400F1-02P	355	475	2980	92.7	86	42.9	39.0	700	116	60	180	8.2	2800
OAA3-400F2-02P	400	535	2980	93.0	86	48.1	43.8	700	131	60	180	8.9	2900
OAA3-400F3-02P	450	605	2980	93.3	86	54.0	49.1	700	147	60	180	9.5	2990
OAA3-400F4-02P	500	670	2980	93.6	86	59.8	54.3	700	164	60	180	9.5	2990
OAA3-400F5-02P	560	750	2980	93.8	86	66.8	60.7	700	183	60	180	10.1	3110
OAA3-450F1-02P	630	845	2980	94.0	87	74.1	67.4	700	206	60	180	10.4	3340
OAA3-450F2-02P	710	950	2980	94.1	87	83.5	75.9	700	232	60	180	11.4	3500
OAA3-450F3-02P	800	1070	2980	94.3	87	93.8	85.3	700	262	60	180	11.4	3500
OAA3-450F4-02P	900	1210	2980	94.5	87	105.3	95.8	700	294	60	180	12.5	3690
OAA3-500F1-02P	1000	1340	2980	94.6	87	116.9	106.3	700	327	60	180	17.6	4520
OAA3-500F2-02P	1120	1500	2980	94.7	87	130.8	118.9	700	366	60	180	19.0	4690
OAA3-500F3-02P	1250	1680	2980	94.9	87	145.7	132.4	700	409	60	180	20.4	4850
OAA3-500F4-02P	1400	1880	2980	95.0	88	161.1	146.5	700	458	60	180	22.3	5060
OAA3-560F1-02P	1600	2140	2980	95.1	88	184.0	167.2	700	523	60	180	37.9	6470
OAA3-560F2-02P	1800	2410	2980	95.2	88	206.8	188.0	700	589	60	180	40.0	6680
OAA3-560F3-02P	2000	2680	2982	95.4	88	229.2	208.4	700	654	60	180	42.1	6880
OAA3-630F1-02P	2240	3000	2982	96.3	88	254.4	231.2	700	732	60	180	67.0	9040
OAA3-630F2-02P	2500	3350	2982	95.5	88	286.3	260.2	700	817	60	180	72.0	9380
OAA3-630F3-02P	2800	3750	2982	95.6	88	320.3	291.2	700	915	60	180	77.0	9720
OAA3-630F4-02P	3150	4220	2982	95.7	88	359.9	327.2	700	1029	60	180	83.0	10190
OAA3-355F1-04P	185	250	1485	91.9	85	22.8	20.7	650	121	70	180	6.4	2290
OAA3-355F2-04P	200	270	1480	92.1	85	24.6	22.3	650	132	70	180	6.4	2290
OAA3-355F3-04P	220	295	1480	92.2	85	27.0	24.6	650	145	70	180	6.9	2370
OAA3-355F4-04P	250	335	1480	92.3	85	30.7	27.9	650	165	70	180	7.5	2450
OAA3-355F5-04P	280	375	1480	92.4	86	33.9	30.8	650	184	70	180	7.5	2450
OAA3-355F6-04P	315	420	1485	92.6	86	38.1	34.6	650	207	70	180	8.0	2530
OAA3-400F1-04P	355	475	1485	92.8	86	42.8	38.9	650	233	70	180	16.2	2800
OAA3-400F2-04P	400	535	1485	93.0	86	48.1	43.8	650	262	70	180	17.6	2930
OAA3-400F3-04P	450	605	1485	93.2	86	54.0	49.1	650	295	70	180	18.9	3020
OAA3-400F4-04P	500	670	1485	93.4	86	59.9	54.5	650	328	70	180	20.2	3120
OAA3-400F5-04P	560	750	1485	93.6	86	66.9	60.9	650	367	70	180	21.6	3250

OAA3系列高压(6kV、6.6kV)三相异步电动机(IC611)

OAA3 SERIES HIGH VOLTAGE(6kV、6.6kV) THREE-PHASE INDUCTION MOTORS(IC611)

电机型号 Motor Type	功率 Rated Power		额定转速 Rated Speed	效率 Efficiency	功率因数 Power Factor	电流 Current			转矩 Torque			转动惯量 Moment of inertia(J)	重量 Approx WT
						Full Load 6kV	Full Load 6.6kV	Locked Rotor	Full Load	Locked Rotor	Pull Out		
	KW	(HP)	RPM	%	%	A	A	%FLC	Kg-m	%FLT	%FLC	Kg-m²	Kg
OAA3-450F2-04P	630	845	1485	93.8	86	75.2	68.3	650	413	70	180	23.6	3580
OAA3-450F3-04P	710	950	1485	94.0	86	84.5	76.8	650	466	70	180	26.0	3770
OAA3-450F4-04P	800	1070	1485	94.3	87	93.8	85.3	650	525	70	180	28.0	3930
OAA3-450F5-04P	900	1210	1485	94.4	87	105.5	95.9	650	591	70	180	30.4	4120
OAA3-500F2-04P	1000	1340	1485	94.5	87	117.0	106.4	650	656	70	180	56.9	5170
OAA3-500F3-04P	1120	1500	1485	94.6	87	131.0	119.0	650	735	70	180	62.1	5400
OAA3-500F5-04P	1250	1680	1485	94.8	88	144.2	131.1	650	820	70	180	66.7	5640
OAA3-500F6-04P	1400	1880	1485	94.9	88	161.3	146.7	650	919	70	180	71.3	5880
OAA3-560F1-04P	1600	2140	1485	95.0	88	184.2	167.4	650	1050	60	180	97.0	6800
OAA3-560F2-04P	1800	2410	1485	95.1	88	207.0	188.2	650	1181	60	180	102.0	7000
OAA3-560F3-04P	2000	2680	1485	95.3	88	229.5	208.6	650	1312	60	180	107.0	7210
OAA3-630F2-04P	2240	3000	1485	95.4	88	256.8	233.4	650	1470	60	180	139.0	9010
OAA3-630F4-04P	2500	3350	1485	95.5	88	286.3	260.2	650	1641	60	180	155.0	9580
OAA3-630F6-04P	2800	3750	1485	95.6	88	320.3	291.2	650	1837	60	180	169.0	10020
OAA3-630F8-04P	3150	4220	1485	95.8	88	359.6	326.9	650	2067	60	180	177.0	10270
OAA3-355F3-06P	185	250	985	91.5	82	23.7	21.6	600	183	70	180	9.4	2360
OAA3-355F4-06P	200	270	985	91.8	82	25.6	23.2	600	198	70	180	10.3	2440
OAA3-355F5-06P	220	295	990	92.0	82	28.1	25.5	600	217	70	180	11.2	2520
OAA3-355F6-06P	250	335	990	92.2	82	31.8	28.9	600	246	70	180	12.1	2600
OAA3-400F2-06P	280	375	990	92.5	82	35.5	32.3	600	276	70	180	22.4	2910
OAA3-400F3-06P	315	420	990	92.8	82	39.8	36.2	600	310	70	180	22.4	2910
OAA3-400F4-06P	355	475	985	93.0	83	44.3	40.2	600	351	70	180	24.2	3000
OAA3-400F5-06P	400	535	985	93.1	83	49.8	45.3	600	396	70	180	26.6	3130
OAA3-450F2-06P	450	605	985	93.4	83	55.9	50.8	600	445	70	180	30.2	3520
OAA3-450F3-06P	500	670	985	93.7	83	61.9	56.2	600	495	70	180	33.1	3680
OAA3-450F4-06P	560	750	990	93.8	84	68.4	62.2	600	551	70	180	36.4	3870
OAA3-450F5-06P	630	845	990	93.9	84	76.9	69.9	600	620	70	180	39.7	4060
OAA3-500F2-06P	710	950	990	94.2	84	86.3	78.5	600	699	70	180	58.7	4780
OAA3-500F3-06P	800	1070	990	94.4	84	97.1	88.3	600	787	70	180	62.6	4930
OAA3-500F4-06P	900	1210	990	94.5	85	107.8	98.0	600	886	70	180	67.9	5160
OAA3-500F5-06P	1000	1340	990	94.6	85	119.7	108.8	600	984	70	180	74.0	5380
OAA3-560F1-06P	1120	1500	990	94.7	85	133.9	121.7	650	1102	70	180	119.0	6340
OAA3-560F2-06P	1250	1680	990	94.9	86	147.4	134.0	650	1230	70	180	125.0	6530
OAA3-560F3-06P	1400	1880	990	95.0	86	164.9	149.9	650	1378	70	180	132.0	6710
OAA3-630F4-06P	1600	2140	990	95.1	86	188.3	171.1	650	1575	70	180	152.0	8440

OAA3系列高压(6kV、6.6kV)三相异步电动机(IC611)

OAA3 SERIES HIGH VOLTAGE(6kV、6.6kV) THREE-PHASE INDUCTION MOTORS(IC611)

电机型号 Motor Type	功率 Rated Power		额定转速 Rated Speed	效率 Efficiency	功率因数 Power Factor	电流 Current			转矩 Torque			转动惯量 Moment of inertia(J)	重量 Approx WT
						Full Load 6kV	Full Load 6.6kV	Locked Rotor	Full Load	Locked Rotor	Pull Out		
	KW	(HP)	RPM	%	%	A	A	%FLC	Kg-m	%FLT	%FLC	Kg-m²	Kg
OAA3-630F5-06P	1800	2410	990	95.2	86	211.6	192.3	650	1772	70	180	166.0	8800
OAA3-630F6-06P	2000	2680	990	95.4	86	234.6	213.3	650	1969	70	180	179.0	9150
OAA3-630F8-06P	2240	3000	990	95.5	86	262.5	238.6	650	2205	70	180	193.0	9510
OAA3-400F1-08P	185	250	740	91.6	78	24.9	22.7	550	244	80	180	22.3	3050
OAA3-400F2-08P	200	270	740	91.9	78	26.8	24.4	550	263	80	180	22.3	3050
OAA3-400F3-08P	220	295	740	92.1	78	29.5	26.8	550	290	80	180	24.2	3150
OAA3-400F4-08P	250	335	740	92.2	79	33.0	30.0	550	329	80	180	26.1	3240
OAA3-400F5-08P	280	375	740	92.4	79	36.9	33.6	550	369	80	180	28.0	3370
OAA3-450F2-08P	315	420	740	92.7	79	41.4	37.6	550	415	80	180	30.2	3490
OAA3-450F3-08P	355	475	740	92.8	79	46.6	42.4	550	467	80	180	33.0	3680
OAA3-450F4-08P	400	535	740	93.0	80	51.7	47.0	550	527	80	180	36.4	3870
OAA3-450F5-08P	450	605	740	93.1	80	58.1	52.9	550	593	80	180	39.7	4060
OAA3-500F2-08P	500	670	740	93.6	80	64.3	58.4	550	658	80	180	64.4	4620
OAA3-500F3-08P	560	750	740	93.8	80	71.8	65.3	550	737	80	180	70.2	4820
OAA3-500F4-08P	630	845	740	93.9	82	78.7	71.6	550	830	80	180	77.0	5060
OAA3-500F5-08P	710	950	740	94.0	82	88.6	80.6	550	935	80	180	83.7	5310
OAA3-560F1-08P	800	1070	740	94.2	82	99.7	90.6	600	1054	70	180	143.0	6440
OAA3-560F2-08P	900	1210	740	94.3	84	109.3	99.4	600	1185	70	180	151.0	6640
OAA3-560F3-08P	1000	1340	740	94.4	84	121.4	110.3	600	1317	70	180	159.0	6840
OAA3-630F4-08P	1120	1500	740	94.5	84	135.8	123.4	600	1475	70	180	199.0	8460
OAA3-630F5-08P	1250	1680	740	94.7	84	151.2	137.5	600	1646	70	180	211.0	8670
OAA3-630F6-08P	1400	1880	740	94.8	84	169.2	153.8	600	1844	70	180	234.0	9100
OAA3-630F7-08P	1600	2140	740	94.9	84	193.1	175.6	600	2107	70	180	245.0	9310
OAA3-630F8-08P	1800	2410	740	95.0	84	217.1	197.3	600	2370	70	180	257.0	9520
OAA3-400F4-10P	185	250	585	90.8	75	26.1	23.8	550	308	80	180	27.6	2960
OAA3-400F5-10P	200	270	585	91.1	75	28.2	25.6	550	333	80	180	29.8	3060
OAA3-450F1-10P	220	295	585	91.3	75	30.9	28.1	550	366	80	180	32.4	3420
OAA3-450F2-10P	250	335	585	91.5	75	35.1	31.9	550	416	80	180	36.3	3610
OAA3-450F3-10P	280	375	585	91.7	75	39.2	35.6	550	466	80	180	39.1	3740
OAA3-450F4-10P	315	420	585	92.1	76	43.3	39.4	550	525	80	180	41.8	3870
OAA3-450F5-10P	355	475	585	92.3	76	48.7	44.3	550	591	80	180	45.7	4060
OAA3-500F1-10P	400	535	585	92.6	76	54.7	49.7	550	666	80	180	56.6	4630
OAA3-500F2-10P	450	605	585	92.7	76	61.5	55.9	550	750	80	180	61.6	4840
OAA3-500F3-10P	500	670	590	93.0	78	66.3	60.3	550	826	80	180	67.6	5080
OAA3-500F4-10P	560	750	590	93.1	78	74.2	67.5	550	925	80	180	73.5	5320

OAA3系列高压(6kV、6.6kV)三相异步电动机(IC611)

OAA3 SERIES HIGH VOLTAGE(6kV、6.6kV) THREE-PHASE INDUCTION MOTORS(IC611)

电机型号 Motor Type	功率 Rated Power		额定转速 Rated Speed	效率 Efficiency	功率因数 Power Factor	电流 Current			转矩 Torque			转动惯量 Moment of inertia(J)	重量 Approx WT
						Full Load 6kV	Full Load 6.6kV	Locked Rotor	Full Load	Locked Rotor	Pull Out		
	KW	(HP)	RPM	%	%	A	A	%FLC	Kg-m	%FLT	%FLC	Kg-m²	Kg
OAA3-500F5-10P	630	845	590	93.2	78	83.4	75.8	550	1041	80	180	80.2	5570
OAA3-560F1-10P	710	950	590	93.4	78	93.8	85.3	600	1173	70	180	151.0	6600
OAA3-560F2-10P	800	1070	590	93.7	80	102.7	93.4	600	1321	70	180	160.0	6800
OAA3-560F3-10P	900	1210	590	93.8	80	115.4	104.9	600	1487	70	180	168.0	6990
OAA3-630F4-10P	1000	1340	590	93.9	80	128.1	116.5	600	1652	70	180	213.0	8460
OAA3-630F5-10P	1120	1500	590	94.1	80	143.2	130.2	600	1850	70	180	231.0	8780
OAA3-630F6-10P	1250	1680	590	94.4	80	159.3	144.8	600	2065	70	180	250.0	9100
OAA3-630F7-10P	1400	1880	590	94.5	80	178.2	162.0	600	2312	70	180	270.0	9410
OAA3-630F8-10P	1600	2140	590	94.6	80	203.4	184.9	600	2643	70	180	287.0	9730
OAA3-450F2-12P	185	250	490	90.9	70	28.0	25.4	550	368	80	180	34.9	3560
OAA3-450F3-12P	200	270	490	91.2	70	30.1	27.4	550	398	80	180	37.1	3660
OAA3-450F4-12P	220	295	490	91.4	72	32.2	29.2	550	438	80	180	39.8	3780
OAA3-450F5-12P	250	335	490	91.7	72	36.4	33.1	550	497	80	180	43.7	3970
OAA3-500F1-12P	280	375	490	91.9	72	40.7	37.0	550	557	80	180	56.5	4700
OAA3-500F2-12P	315	420	490	92.1	72	45.7	41.6	550	626	80	180	59.0	4870
OAA3-500F3-12P	355	475	490	92.3	74	50.0	45.5	550	706	80	180	61.8	5030
OAA3-500F4-12P	400	535	490	92.6	74	56.2	51.1	550	796	80	180	65.0	5190
OAA3-500F5-12P	450	605	490	92.7	74	63.1	57.4	550	895	80	180	67.0	5360
OAA3-560F1-12P	500	670	490	93.1	74	69.8	63.5	600	994	70	180	148.0	6450
OAA3-560F2-12P	560	750	490	93.2	76	76.1	69.2	600	1114	70	180	156.0	6650
OAA3-560F3-12P	630	845	490	93.3	76	85.5	77.7	600	1253	70	180	164.0	6850
OAA3-630F4-12P	710	950	490	93.4	76	96.2	87.5	600	1412	70	180	207.0	8250
OAA3-630F5-12P	800	1070	490	93.7	76	108.1	98.3	600	1591	70	180	227.0	8570
OAA3-630F6-12P	900	1210	490	93.8	76	121.5	110.4	600	1790	70	180	244.0	8880
OAA3-630F7-12P	1000	1340	490	93.9	76	134.8	122.6	600	1989	70	180	261.0	9200
OAA3-630F8-12P	1120	1500	490	94.0	76	150.9	137.1	600	2227	70	180	281.0	9520

OAA3系列高压(10kV、11kV)三相异步电动机(IC611)

OAA3 SERIES HIGH VOLTAGE (10kV、11kV) THREE-PHASE INDUCTION MOTORS(IC611)

电机型号 Motor Type	功率 Rated Power		额定转速 Rated Speed	效率 Efficiency	功率因数 Power Factor	电流 Current			转矩 Torque			转动惯量 Moment of inertia(J)	重量 Approx WT
						Full Load 10kV	Full Load 11kV	Locked Rotor	Full Load	Locked Rotor	Pull Out		
	KW	(HP)	RPM	%	%	A	A	%FLC	Kg-m	%FLT	%FLC	Kg-m²	Kg
OAA3-400F1-02P	200	270	2975	91.5	85	14.8	13.5	750	66	60	180	8.2	2750
OAA3-400F2-02P	220	295	2975	91.6	85	16.3	14.8	750	72	60	180	8.2	2800
OAA3-400F3-02P	250	335	2975	91.8	85	18.5	16.8	750	82	60	180	8.2	2800
OAA3-400F4-02P	280	375	2975	92.1	85	20.7	18.8	700	92	60	180	8.9	2930
OAA3-400F5-02P	315	420	2975	92.4	85	23.2	21.1	700	103	60	180	8.9	2930
OAA3-400F6-02P	355	475	2980	92.8	86	25.7	23.3	700	116	60	180	9.5	3050
OAA3-400F7-02P	400	535	2980	93.1	86	28.8	26.2	700	131	60	180	10.1	3180
OAA3-450F1-02P	450	605	2980	93.3	86	32.4	29.4	700	147	60	180	10.4	3340
OAA3-450F2-02P	500	670	2980	93.4	86	35.9	32.7	700	164	60	180	10.4	3340
OAA3-450F3-02P	560	750	2980	93.6	86	40.2	36.5	700	183	60	180	11.7	3530
OAA3-450F4-02P	630	845	2980	93.7	87	44.6	40.6	700	206	60	180	11.4	3530
OAA3-450F5-02P	710	950	2980	93.8	87	50.2	45.7	700	232	60	180	12.5	3750
OAA3-500F1-02P	800	1070	2980	94.0	87	56.5	51.3	700	262	60	180	17.6	4520
OAA3-500F2-02P	900	1210	2980	94.1	87	63.5	57.7	700	294	60	180	19.0	4730
OAA3-500F3-02P	1000	1340	2980	94.2	87	70.5	64.0	700	327	60	180	20.4	4930
OAA3-500F4-02P	1120	1500	2980	94.4	87	78.7	71.6	700	366	60	180	22.3	5220
OAA3-560F1-02P	1250	1680	2980	94.6	87	87.7	79.7	700	409	60	180	35.8	6120
OAA3-560F2-02P	1400	1880	2982	94.8	87	98.0	89.1	700	458	60	180	37.9	6380
OAA3-560F3-02P	1600	2140	2982	94.9	88	110.6	100.6	700	523	60	180	40.0	6590
OAA3-560F4-02P	1800	2410	2982	95.0	88	124.3	113.0	700	588	60	180	42.1	6790
OAA3-630F1-02P	2000	2680	2982	95.2	88	137.8	125.3	700	654	60	180	76.0	9650
OAA3-630F2-02P	2240	3000	2982	95.4	88	154.1	140.0	700	732	60	180	79.0	9920
OAA3-630F3-02P	2500	3350	2982	95.4	88	171.9	156.3	700	817	60	180	83.0	10190
OAA3-400F1-04P	200	270	1485	91.3	83	15.2	13.9	700	131	70	180	16.2	2800
OAA3-400F2-04P	220	295	1485	91.4	83	16.7	15.2	700	144	70	180	16.2	2800
OAA3-400F3-04P	250	335	1485	91.6	83	19.0	17.3	700	164	70	180	17.6	2930
OAA3-400F4-04P	280	375	1485	91.8	83	21.2	19.3	700	184	70	180	18.9	3020
OAA3-400F5-04P	315	420	1485	92.1	83	23.8	21.6	700	207	70	180	18.9	3020
OAA3-400F6-04P	355	475	1485	92.3	86	25.8	23.5	700	233	70	180	20.2	3120
OAA3-400F7-04P	400	535	1485	92.5	86	29.0	26.4	700	262	70	180	21.6	3250
OAA3-450F1-04P	450	605	1485	92.9	86	32.5	29.6	700	295	70	180	21.9	3490
OAA3-450F2-04P	500	670	1485	93.0	86	36.1	32.8	700	328	70	180	23.6	3610
OAA3-450F3-04P	560	750	1485	93.3	86	40.3	36.6	700	367	70	180	26.0	3770
OAA3-450F4-04P	630	845	1485	93.5	86	45.2	41.1	700	413	70	180	28.0	3930
OAA3-450F5-04P	710	950	1485	94.1	86	50.7	46.1	700	466	70	180	30.4	4120

OAA3系列高压(10kV、11kV)三相异步电动机(IC611)

OAA3 SERIES HIGH VOLTAGE (10kV、11kV) THREE-PHASE INDUCTION MOTORS(IC611)

电机型号 Motor Type	功率 Rated Power		额定转速 Rated Speed	效率 Efficiency	功率因数 Power Factor	电流 Current			转矩 Torque			转动惯量 Moment of inertia(J)	重量 Approx WT
						Full Load 10kV	Full Load 11kV	Locked Rotor	Full Load	Locked Rotor	Pull Out		
	KW	(HP)	RPM	%	%	A	A	%FLC	Kg-m	%FLT	%FLC	Kg-m²	Kg
OAA3-500F1-04P	800	1070	1485	94.3	87	56.3	51.2	700	525	70	180	53.6	5010
OAA3-500F2-04P	900	1210	1485	94.4	87	63.3	57.5	700	591	70	180	56.9	5170
OAA3-500F3-04P	1000	1340	1490	94.5	87	70.2	63.8	650	654	70	180	62.1	5400
OAA3-500F4-04P	1120	1500	1490	94.6	87	78.6	71.4	650	733	70	180	66.7	5640
OAA3-560F1-04P	1250	1680	1490	94.7	88	86.6	78.7	650	818	70	180	92.0	6590
OAA3-560F2-04P	1400	1880	1490	95.0	88	96.7	87.9	650	916	70	180	97.0	6800
OAA3-560F3-04P	1600	2140	1492	95.1	88	110.4	100.3	650	1045	60	180	102.0	7000
OAA3-560F4-04P	1800	2410	1492	95.2	88	124.1	112.8	650	1176	60	180	107.0	7210
OAA3-630F1-04P	2000	2680	1492	95.4	88	137.5	125.0	650	1306	60	180	154.0	9520
OAA3-630F2-04P	2240	3000	1492	95.5	88	153.9	139.9	650	1463	60	180	161.0	9770
OAA3-630F3-04P	2500	3350	1492	95.5	88	171.8	156.1	650	1633	60	180	169.0	10020
OAA3-400F1-06P	220	295	980	91.2	80	17.4	15.8	600	219	70	180	24.2	2970
OAA3-400F2-06P	250	335	980	91.4	80	19.7	17.9	600	249	70	180	26.0	3070
OAA3-400F3-06P	280	375	980	91.7	80	22.0	20.0	600	278	70	180	27.9	3190
OAA3-450F1-06P	315	420	980	92.0	82	24.1	21.9	600	313	70	180	28.3	3420
OAA3-450F2-06P	355	475	980	92.2	83	26.8	24.3	600	353	70	180	30.2	3520
OAA3-450F3-06P	400	535	995	92.4	83	30.1	27.4	650	392	70	180	33.1	3680
OAA3-450F4-06P	450	605	995	92.6	83	33.8	30.7	650	441	70	180	36.4	3870
OAA3-450F5-06P	500	670	995	93.0	83	37.4	34.0	650	490	70	180	39.7	4060
OAA3-500F1-06P	560	750	995	93.3	84	41.3	37.5	650	548	70	180	58.7	4780
OAA3-500F2-06P	630	845	995	93.6	84	46.3	42.1	650	617	70	180	62.6	4930
OAA3-500F3-06P	710	950	995	93.8	84	52.0	47.3	600	695	70	180	67.9	5160
OAA3-500F4-06P	800	1070	995	94.0	84	58.5	53.2	600	784	70	180	74.0	5380
OAA3-500F5-06P	900	1210	995	94.2	85	64.9	59.0	600	881	70	180	80.2	5650
OAA3-560F1-06P	1000	1340	995	94.4	85	72.0	65.4	600	979	70	180	109.0	6160
OAA3-560F2-06P	1120	1500	995	94.6	85	80.4	73.1	600	1097	60	180	119.0	6340
OAA3-560F3-06P	1250	1680	995	94.7	86	88.6	80.6	600	1224	60	180	132.0	6710
OAA3-560F4-06P	1400	1880	995	95.1	86	98.8	89.8	600	1371	60	180	139.0	6890
OAA3-630F1-06P	1600	2140	995	95.2	86	112.8	102.6	600	1567	60	180	175.0	9030
OAA3-630F2-06P	1800	2410	995	95.3	86	126.8	115.3	600	1763	60	180	184.0	9270
OAA3-630F3-06P	2000	2680	995	95.4	86	140.7	128.0	600	1959	60	180	197.0	9570
OAA3-630F4-06P	2240	3000	995	95.4	86	157.6	143.3	600	2194	60	180	212.0	9980
OAA3-450F1-08P	200	270	745	91.0	75	16.9	15.4	550	262	70	180	28.4	3420
OAA3-450F2-08P	220	295	745	91.1	75	18.6	16.9	550	288	70	180	30.2	3520
OAA3-450F3-08P	250	335	745	91.3	75	21.1	19.2	600	327	70	180	33.0	3680

OAA3系列高压(10kV、11kV)三相异步电动机(IC611)

OAA3 SERIES HIGH VOLTAGE (10kV、11kV) THREE-PHASE INDUCTION MOTORS(IC611)

电机型号 Motor Type	功率 Rated Power		额定转速 Rated Speed	效率 Efficiency	功率因数 Power Factor	电流 Current			转矩 Torque			转动惯量 Moment of inertia(J)	重量 Approx WT
						Full Load 10kV	Full Load 11kV	Locked Rotor	Full Load	Locked Rotor	Pull Out		
	KW	(HP)	RPM	%	%	A	A	%FLC	Kg-m	%FLT	%FLC	Kg-m²	Kg
OAA3-450F4-08P	280	375	745	91.6	76	21.1	600	366	366	70	180	36.4	3870
OAA3-450F5-08P	315	420	745	92.0	77	23.3	600	412	412	70	180	39.7	4060
OAA3-500F1-08P	355	475	745	92.4	77	26.2	600	464	464	70	180	57.7	4420
OAA3-500F2-08P	400	535	745	92.5	78	29.1	600	523	523	70	180	64.4	4620
OAA3-500F3-08P	450	605	745	92.7	78	32.7	600	589	589	70	180	70.2	4820
OAA3-500F4-08P	500	670	745	93.1	79	35.7	600	654	654	70	180	77.0	5060
OAA3-500F5-08P	560	750	745	93.3	79	39.9	600	733	733	70	180	83.7	5310
OAA3-500F6-08P	630	845	745	93.8	82	43.0	600	824	824	70	180	91.4	5550
OAA3-560F1-08P	710	950	745	94.0	82	48.3	600	929	929	70	180	159.0	6530
OAA3-560F2-08P	800	1070	742	94.2	82	54.4	600	1051	1051	70	180	167.0	6710
OAA3-560F3-08P	900	1210	742	94.3	82	61.1	600	1182	1182	70	180	176.0	6890
OAA3-560F4-08P	1000	1340	742	94.5	82	67.7	600	1313	1313	70	180	184.0	7070
OAA3-630F1-08P	1120	1500	742	94.7	83	74.8	600	1471	1471	70	180	234.0	9100
OAA3-630F2-08P	1250	1680	742	94.8	83	83.4	600	1642	1642	70	180	245.0	9310
OAA3-630F3-08P	1400	1880	742	94.9	83	93.3	600	1839	1839	70	180	257.0	9520
OAA3-630F4-08P	1600	2140	742	94.9	83	106.6	600	2101	2101	70	180	268.0	9730
OAA3-450F1-10P	200	270	595	90.8	72	17.7	16.1	550	328	70	180	39.1	3740
OAA3-450F2-10P	220	295	595	91.0	72	19.4	17.6	550	360	70	180	41.8	3870
OAA3-500F1-10P	250	335	595	91.2	72	22.0	20.0	550	409	70	180	56.6	4630
OAA3-500F2-10P	280	375	595	91.5	74	23.9	21.7	550	459	70	180	61.6	4840
OAA3-500F3-10P	315	420	595	91.7	74	26.8	24.4	550	516	70	180	67.6	5080
OAA3-500F4-10P	355	475	595	92.1	75	29.7	27.0	550	581	70	180	73.5	5320
OAA3-500F5-10P	400	535	595	92.3	75	33.4	30.3	550	655	70	180	80.2	5570
OAA3-500F6-10P	450	605	595	92.5	76	37.0	33.6	550	737	70	180	86.9	5810
OAA3-560F1-10P	500	670	595	92.7	77	40.4	36.8	550	819	70	180	135.0	6200
OAA3-560F2-10P	560	750	595	92.9	78	44.6	40.6	550	917	70	180	143.0	6400
OAA3-560F3-10P	630	845	595	93.1	78	50.1	45.5	600	1032	70	180	160.0	6800
OAA3-560F4-10P	710	950	595	93.3	78	56.3	51.2	600	1163	70	180	168.0	6990
OAA3-560F5-10P	800	1070	595	93.8	78	63.1	57.4	600	1310	70	180	176.0	7190
OAA3-630F1-10P	900	1210	595	94.0	80	69.1	62.8	600	1474	70	180	213.0	8460
OAA3-630F2-10P	1000	1340	595	94.1	80	76.7	69.7	600	1638	70	180	231.0	8780
OAA3-630F3-10P	1120	1500	595	94.2	80	85.8	78.0	600	1834	70	180	250.0	9100
OAA3-630F4-10P	1250	1680	595	94.2	80	95.8	87.1	600	2047	70	180	270.0	9410
OAA3-630F5-10P	1400	1880	595	94.3	80	107.1	97.4	600	2293	70	180	287.0	9730
OAA3-500F1-12P	200	270	495	92.2	72	17.4	15.8	550	394	70	180	61.8	5030

OAA3系列高压(10kV、11kV)三相异步电动机(IC611)

OAA3 SERIES HIGH VOLTAGE(10kV、11kV) THREE-PHASE INDUCTION MOTORS(IC611)

电机型号 Motor Type	功率 Rated Power		额定转速 Rated Speed	效率 Efficiency	功率因数 Power Factor	电流 Current			转矩 Torque			转动惯量 Moment of inertia(J)	重量 Approx WT
						Full Load 10kV	Full Load 11kV	Locked Rotor	Full Load	Locked Rotor	Pull Out		
	KW	(HP)	RPM	%	%	A	A	%FLC	Kg-m	%FLT	%FLC	Kg-m²	Kg
OAA3-500F2-12P	220	295	495	92.4	72	19.1	17.4	550	433	70	180	64.6	5190
OAA3-500F3-12P	250	335	495	92.6	72	21.6	19.7	550	492	70	180	67.3	5360
OAA3-500F4-12P	280	375	495	92.8	72	24.2	22.0	550	551	70	180	70.1	5520
OAA3-500F5-12P	315	420	495	93.0	72	27.2	24.7	550	620	70	180	72.8	5680
OAA3-560F1-12P	355	475	495	93.2	72	30.5	27.8	550	699	70	180	148.0	6400
OAA3-560F2-12P	400	535	495	93.4	73	33.9	30.8	550	787	70	180	156.0	6600
OAA3-560F3-12P	450	605	495	93.5	73	38.1	34.6	600	886	70	180	164.0	6800
OAA3-560F4-12P	500	670	495	93.8	73	42.2	38.3	600	984	70	180	172.0	6990
OAA3-560F5-12P	560	750	495	94.1	74	46.4	42.2	600	1102	70	180	180.0	7190
OAA3-630F1-12P	630	845	495	94.3	74	52.1	47.4	600	1240	70	180	207.0	8250
OAA3-630F2-12P	710	950	495	94.5	74	58.6	53.3	600	1398	70	180	227.0	8570
OAA3-630F3-12P	800	1070	495	94.8	74	65.8	59.9	600	1575	70	180	244.0	8880
OAA3-630F4-12P	900	1205	495	94.8	74	74.1	67.3	600	1772	70	180	261.0	9200
OAA3-630F5-12P	1000	1340	495	94.8	74	82.3	74.8	600	1969	70	180	281.0	9520

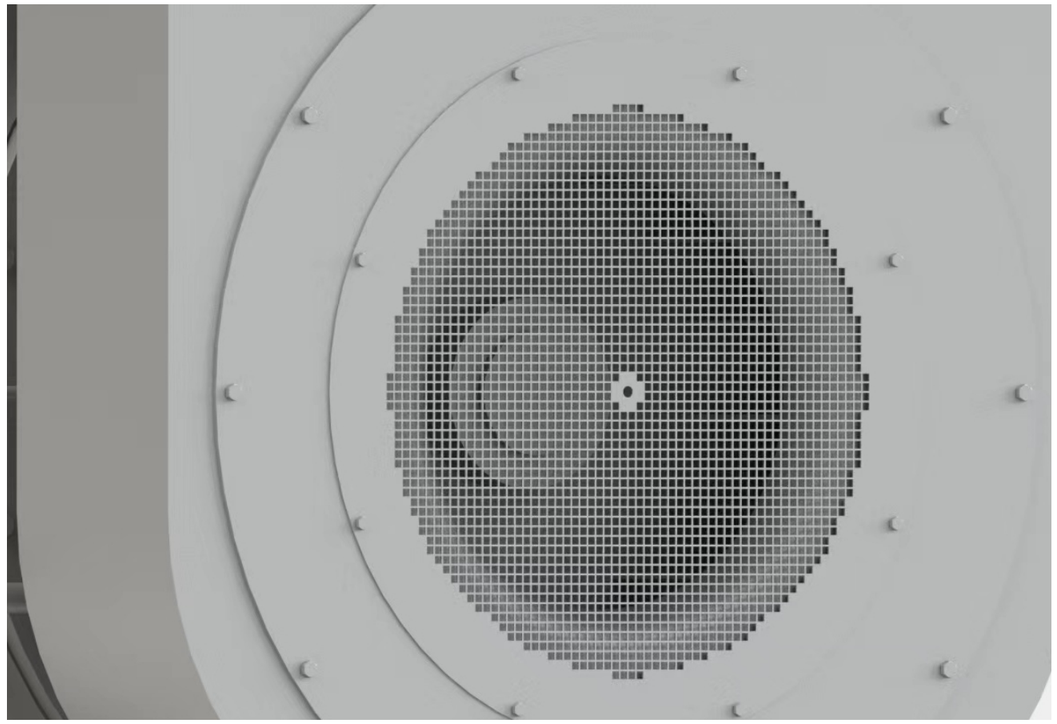

OAA4系列高压(6kV、6.6kV)三相异步电动机(IC611)

OAA4 SERIES HIGH VOLTAGE(6kV、6.6kV) THREE-PHASE INDUCTION MOTORS(IC611)

电机型号 Motor Type	功率 Rated Power		额定转速 Rated Speed	效率 Efficiency	功率因数 Power Factor	电流 Current			转矩 Torque			转动惯量 Moment of inertia(J)	重量 Approx WT
						Full Load 6kV	Full Load 6.6kV	Locked Rotor	Full Load	Locked Rotor	Pull Out		
	KW	(HP)	RPM	%	%	A	A	%FLC	Kg-m	%FLT	%FLC	Kg-m²	Kg
OAA4-355F1-02P	220	295	2975	93.1	85	26.8	24.3	700	72	60	180	4.0	2730
OAA4-355F2-02P	250	335	2975	93.2	85	30.4	27.6	700	82	60	180	4.0	2730
OAA4-355F3-02P	280	375	2975	93.4	85	33.9	30.9	700	92	60	180	4.3	2790
OAA4-355F4-02P	315	420	2975	93.7	85	38.1	34.6	700	103	60	180	4.6	2880
OAA4-400F1-02P	355	475	2980	93.9	86	42.3	38.5	700	116	60	180	8.5	2900
OAA4-400F1-02P	400	535	2980	94.2	86	47.5	43.2	700	131	60	180	9.3	3000
OAA4-400F2-02P	450	605	2980	94.4	86	53.3	48.5	700	147	60	180	9.9	3090
OAA4-400F3-02P	500	670	2980	94.7	86	59.1	53.7	700	164	60	180	9.9	3090
OAA4-400F4-02P	560	750	2980	94.9	86	66.0	60.0	700	183	60	180	10.5	3220
OAA4-450F1-02P	630	845	2980	95.0	87	73.3	66.7	700	206	60	180	10.8	3460
OAA4-450F2-02P	710	950	2980	95.1	87	82.6	75.1	700	232	60	180	11.9	3620
OAA4-450F3-02P	800	1070	2980	95.3	87	92.8	84.4	700	262	60	180	11.9	3620
OAA4-450F4-02P	900	1210	2980	95.5	87	104.2	94.8	700	294	60	180	13.0	3820
OAA4-500F1-02P	1000	1340	2980	95.5	87	115.8	105.3	700	327	60	180	18.3	4680
OAA4-500F2-02P	1120	1500	2980	95.6	87	129.6	117.8	700	366	60	180	19.8	4850
OAA4-500F3-02P	1250	1680	2980	95.8	87	144.3	131.2	700	409	60	180	21.2	5020
OAA4-500F4-02P	1400	1880	2980	95.9	88	159.6	145.1	700	458	60	180	23.2	5240
OAA4-560F1-02P	1600	2140	2980	96.0	88	182.2	165.7	700	523	60	180	39.4	6700
OAA4-560F2-02P	1800	2410	2980	96.0	88	205.0	186.4	700	589	60	180	41.6	6910
OAA4-560F3-02P	2000	2680	2982	96.2	88	227.3	206.7	700	654	60	180	43.8	7120
OAA4-630F1-02P	2240	3000	2982	96.3	88	254.4	231.2	700	732	60	180	69.7	9360
OAA4-630F2-02P	2500	3350	2982	96.4	88	283.6	257.8	700	817	60	180	74.9	9710
OAA4-630F3-02P	2800	3750	2982	96.4	88	317.6	288.7	700	915	60	180	80.1	10060
OAA4-630F4-02P	3150	4220	2982	96.5	88	356.9	324.5	700	1029	60	180	86.3	10550
OAA4-355F1-04P	185	250	1485	93.3	85	22.4	20.4	650	121	70	180	6.7	2370
OAA4-355F2-04P	200	270	1480	93.4	85	24.2	22.0	650	132	70	180	6.7	2370
OAA4-355F3-04P	220	295	1480	93.5	85	26.6	24.2	650	145	70	180	7.2	2450
OAA4-355F4-04P	250	335	1480	93.6	85	30.2	27.5	650	165	70	180	7.8	2540
OAA4-355F5-04P	280	375	1480	93.7	86	33.4	30.4	650	184	70	180	7.8	2540
OAA4-355F6-04P	315	420	1485	93.8	86	37.6	34.2	650	207	70	180	8.3	2620
OAA4-400F1-04P	355	475	1485	94.0	86	42.3	38.4	650	233	70	180	16.8	2900
OAA4-400F2-04P	400	535	1485	94.2	86	47.5	43.2	650	262	70	180	18.3	3030
OAA4-400F3-04P	450	605	1485	94.4	86	53.3	48.5	650	295	70	180	19.7	3130
OAA4-400F4-04P	500	670	1485	94.5	86	59.2	53.8	650	328	70	180	21.0	3230
OAA4-400F5-04P	560	750	1485	94.7	86	66.2	60.2	650	367	70	180	22.5	3360

OAA4系列高压(6kV、6.6kV)三相异步电动机(IC611)

OAA4 SERIES HIGH VOLTAGE (6kV、6.6kV) THREE-PHASE INDUCTION MOTORS(IC611)

电机型号 Motor Type	功率 Rated Power		额定转速 Rated Speed	效率 Efficiency	功率因数 Power Factor	电流 Current			转矩 Torque			转动惯量 Moment of inertia(J)	重量 Approx WT
						Full Load 6kV	Full Load 6.6kV	Locked Rotor	Full Load	Locked Rotor	Pull Out		
	KW	(HP)	RPM	%	%	A	A	%FLC	Kg-m	%FLT	%FLC	Kg-m²	Kg
OAA4-450F1-04P	630	845	1485	94.9	86	74.3	67.5	650	413	70	180	24.5	3710
OAA4-450F2-04P	710	950	1485	95.0	86	83.6	76.0	650	466	70	180	27.0	3900
OAA4-450F3-04P	800	1070	1485	95.3	87	92.8	84.4	650	525	70	180	29.1	4070
OAA4-450F4-04P	900	1210	1485	95.4	87	104.3	94.9	650	591	70	180	31.6	4260
OAA4-500F1-04P	1000	1340	1485	95.5	87	115.8	105.3	650	656	70	180	59.2	5350
OAA4-500F2-04P	1120	1500	1485	95.5	87	129.7	117.9	650	735	70	180	64.6	5590
OAA4-500F3-04P	1250	1680	1485	95.7	88	142.8	129.8	650	820	70	180	69.4	5840
OAA4-500F4-04P	1400	1880	1485	95.8	88	159.8	145.3	650	919	70	180	74.2	6090
OAA4-560F1-04P	1600	2140	1485	95.9	88	182.4	165.9	650	1050	60	180	101	7040
OAA4-560F2-04P	1800	2410	1485	96.0	88	205.0	186.4	650	1181	60	180	106	7250
OAA4-560F3-04P	2000	2680	1485	96.1	88	227.6	206.9	650	1312	60	180	111	7460
OAA4-630F1-04P	2240	3000	1485	96.2	88	254.6	231.5	650	1470	60	180	145	9330
OAA4-630F2-04P	2500	3350	1485	96.3	88	283.9	258.1	650	1641	60	180	161	9920
OAA4-630F3-04P	2800	3750	1485	96.3	88	317.9	289.0	650	1837	60	180	176	10370
OAA4-630F4-04P	3150	4220	1485	96.5	88	356.9	324.5	650	2067	60	180	184	10630
OAA4-355F1-06P	185	250	985	93.0	82	23.3	21.2	600	183	70	180	9.8	2440
OAA4-355F2-06P	200	270	985	93.1	82	25.2	22.9	600	198	70	180	10.7	2530
OAA4-355F3-06P	220	295	990	93.3	82	27.7	25.2	600	217	70	180	11.6	2610
OAA4-355F4-06P	250	335	990	93.5	82	31.4	28.5	600	246	70	180	12.6	2690
OAA4-400F1-06P	280	375	990	93.8	82	35.0	31.8	600	276	70	180	23.3	3010
OAA4-400F2-06P	315	420	990	94.0	82	39.3	35.8	600	310	70	180	23.3	3010
OAA4-400F3-06P	355	475	985	94.2	83	43.7	39.7	600	351	70	180	25.2	3110
OAA4-400F4-06P	400	535	985	94.3	83	49.2	44.7	600	396	70	180	27.7	3240
OAA4-450F1-06P	450	605	985	94.5	83	55.2	50.2	600	445	70	180	31.4	3640
OAA4-450F2-06P	500	670	985	94.8	83	61.1	55.6	600	495	70	180	34.4	3810
OAA4-450F3-06P	560	750	990	94.9	84	67.6	61.5	600	551	70	180	37.9	4010
OAA4-450F4-06P	630	845	990	95.0	84	76.0	69.1	600	620	70	180	41.3	4200
OAA4-500F1-06P	710	950	990	95.2	84	85.4	77.7	600	699	70	180	61.0	4950
OAA4-500F2-06P	800	1070	990	95.4	84	96.1	87.3	600	787	70	180	65.1	5100
OAA4-500F3-06P	900	1210	990	95.5	85	106.7	97.0	600	886	70	180	70.6	5340
OAA4-500F4-06P	1000	1340	990	95.5	85	118.5	107.8	600	984	70	180	77.0	5570
OAA4-560F1-06P	1120	1500	990	95.6	85	132.6	120.6	650	1102	70	180	124	6560
OAA4-560F2-06P	1250	1680	990	95.8	86	146.0	132.7	650	1230	70	180	130	6760
OAA4-560F3-06P	1400	1880	990	95.9	86	163.3	148.5	650	1378	70	180	137	6940
OAA4-630F1-06P	1600	2140	990	96.0	86	186.5	169.5	650	1575	70	180	158	8740

OAA4系列高压(6kV、6.6kV)三相异步电动机(IC611)

OAA4 SERIES HIGH VOLTAGE(6kV、6.6kV) THREE-PHASE INDUCTION MOTORS(IC611)

电机型号 Motor Type	功率 Rated Power		额定转速 Rated Speed	效率 Efficiency	功率因数 Power Factor	电流 Current			转矩 Torque			转动惯量 Moment of inertia(J)	重量 Approx WT
						Full Load 6kV	Full Load 6.6kV	Locked Rotor	Full Load	Locked Rotor	Pull Out		
	KW	(HP)	RPM	%	%	A	A	%FLC	Kg-m	%FLT	%FLC	Kg-m²	Kg
OAA4-630F2-06P	1800	2410	990	96.0	86	209.8	190.7	650	1772	70	180	173	9110
OAA4-630F3-06P	2000	2680	990	96.2	86	232.6	211.5	650	1969	70	180	186	9470
OAA4-630F4-06P	2240	3000	990	96.2	86	260.5	236.9	650	2205	70	180	201	9840
OAA4-400F1-08P	185	250	740	93.0	78	24.5	22.3	550	244	80	180	23.2	3160
OAA4-400F2-08P	200	270	740	93.2	78	26.5	24.1	550	263	80	180	23.2	3160
OAA4-400F3-08P	220	295	740	93.4	78	29.1	26.4	550	290	80	180	25.2	3260
OAA4-400F4-08P	250	335	740	93.5	79	32.6	29.6	550	329	80	180	27.1	3350
OAA4-400F5-08P	280	375	740	93.7	79	36.4	33.1	550	369	80	180	29.1	3490
OAA4-450F1-08P	315	420	740	93.9	79	40.9	37.1	550	415	80	180	31.4	3610
OAA4-450F2-08P	355	475	740	94.0	79	46.0	41.8	550	467	80	180	34.3	3810
OAA4-450F3-08P	400	535	740	94.2	80	51.1	46.4	550	527	80	180	37.9	4010
OAA4-450F4-08P	450	605	740	94.3	80	57.4	52.2	550	593	80	180	41.3	4200
OAA4-500F1-08P	500	670	740	94.7	80	63.5	57.7	550	658	80	180	67.0	4780
OAA4-500F2-08P	560	750	740	94.9	80	71.0	64.5	550	737	80	180	73.0	4990
OAA4-500F3-08P	630	845	740	95.0	82	77.8	70.7	550	830	80	180	80.1	5240
OAA4-500F4-08P	710	950	740	95.0	82	87.7	79.7	550	935	80	180	87.0	5500
OAA4-560F1-08P	800	1070	740	95.2	82	98.6	89.6	600	1054	70	180	149	6670
OAA4-560F2-08P	900	1210	740	95.3	84	108.2	98.4	600	1185	70	180	157	6870
OAA4-560F3-08P	1000	1340	740	95.4	84	120.1	109.2	600	1317	70	180	165	7080
OAA4-630F1-08P	1120	1500	740	95.5	84	134.3	122.1	600	1475	70	180	207	8760
OAA4-630F2-08P	1250	1680	740	95.6	84	149.8	136.2	600	1646	70	180	219	8970
OAA4-630F3-08P	1400	1880	740	95.7	84	167.6	152.4	600	1844	70	180	243	9420
OAA4-630F4-08P	1600	2140	740	95.8	84	191.3	173.9	600	2107	70	180	255	9640
OAA4-630F5-08P	1800	2410	740	95.8	84	215.2	195.7	600	2370	70	180	267	9850
OAA4-400F1-10P	185	250	585	92.4	75	25.7	23.4	550	308	80	180	28.7	3060
OAA4-400F2-10P	200	270	585	92.6	75	27.7	25.2	550	333	80	180	31.0	3170
OAA4-450F1-10P	220	295	585	92.7	75	30.4	27.7	550	366	80	180	33.7	3540
OAA4-450F2-10P	250	335	585	92.9	75	34.5	31.4	550	416	80	180	37.8	3740
OAA4-450F3-10P	280	375	585	93.1	75	38.6	35.1	550	466	80	180	40.7	3870
OAA4-450F4-10P	315	420	585	93.4	76	42.7	38.8	550	525	80	180	43.5	4010
OAA4-450F5-10P	355	475	585	93.6	76	48.0	43.7	550	591	80	180	47.5	4200
OAA4-500F1-10P	400	535	585	93.8	76	54.0	49.1	550	666	80	180	58.9	4790
OAA4-500F2-10P	450	605	585	93.9	76	60.7	55.2	550	750	80	180	64.1	5010
OAA4-500F3-10P	500	670	590	94.2	78	65.5	59.5	550	826	80	180	70.3	5260
OAA4-500F4-10P	560	750	590	94.3	78	73.3	66.6	550	925	80	180	76.4	5510

OAA4系列高压(6kV、6.6kV)三相异步电动机(IC611)

OAA4 SERIES HIGH VOLTAGE(6kV、6.6kV) THREE-PHASE INDUCTION MOTORS(IC611)

电机型号 Motor Type	功率 Rated Power		额定转速 Rated Speed	效率 Efficiency	功率因数 Power Factor	电流 Current			转矩 Torque			转动惯量 Moment of inertia(J)	重量 Approx WT
						Full Load 6kV	Full Load 6.6kV	Locked Rotor	Full Load	Locked Rotor	Pull Out		
	KW	(HP)	RPM	%	%	A	A	%FLC	Kg-m	%FLT	%FLC	Kg-m²	Kg
OAA4-500F5-10P	630	845	590	94.4	78	82.3	74.8	550	1041	80	180	83.4	5760
OAA4-560F1-10P	710	950	590	94.5	78	92.7	84.3	600	1173	70	180	157	6830
OAA4-560F2-10P	800	1070	590	94.8	80	101.5	92.3	600	1321	70	180	166	7040
OAA4-560F3-10P	900	1210	590	94.9	80	114.1	103.7	600	1487	70	180	175	7230
OAA4-630F1-10P	1000	1340	590	95.0	80	126.6	115.1	600	1652	70	180	222	8760
OAA4-630F2-10P	1120	1500	590	95.1	80	141.7	128.8	600	1850	70	180	240	9090
OAA4-630F3-10P	1250	1680	590	95.4	80	157.6	143.3	600	2065	70	180	260	9420
OAA4-630F4-10P	1400	1880	590	95.5	80	176.3	160.3	600	2312	70	180	281	9740
OAA4-630F5-10P	1600	2140	590	95.5	80	201.5	183.2	600	2643	70	180	298	10070
OAA4-450F1-12P	185	250	490	92.5	70	27.5	25.0	550	368	80	180	36.3	3680
OAA4-450F2-12P	200	270	490	92.6	70	29.7	27.0	550	398	80	180	38.6	3790
OAA4-450F3-12P	220	295	490	92.8	72	31.7	28.8	550	438	80	180	41.4	3910
OAA4-450F4-12P	250	335	490	93.1	72	35.9	32.6	550	497	80	180	45.4	4110
OAA4-500F1-12P	280	375	490	93.3	72	40.1	36.5	550	557	80	180	58.8	4860
OAA4-500F2-12P	315	420	490	93.4	72	45.1	41.0	550	626	80	180	61.4	5040
OAA4-500F3-12P	355	475	490	93.6	74	49.3	44.8	550	706	80	180	64.3	5210
OAA4-500F4-12P	400	535	490	93.8	74	55.5	50.4	550	796	80	180	67.6	5370
OAA4-500F5-12P	450	605	490	93.9	74	62.3	56.7	550	895	80	180	69.7	5550
OAA4-560F1-12P	500	670	490	94.2	74	69.0	62.7	600	994	70	180	154	6680
OAA4-560F2-12P	560	750	490	94.3	76	75.2	68.4	600	1114	70	180	162	6880
OAA4-560F3-12P	630	845	490	94.4	76	84.5	76.8	600	1253	70	180	171	7090
OAA4-630F1-12P	710	950	490	94.5	76	95.1	86.5	600	1412	70	180	215	8540
OAA4-630F2-12P	800	1070	490	94.8	76	106.8	97.1	600	1591	70	180	236	8870
OAA4-630F3-12P	900	1210	490	94.9	76	120.1	109.2	600	1790	70	180	254	9190
OAA4-630F4-12P	1000	1340	490	95.0	76	133.3	121.2	600	1989	70	180	271	9520
OAA4-630F5-12P	1120	1500	490	95.0	76	149.3	135.7	600	2227	70	180	292	9850

OAA4系列高压(10kV、11kV)三相异步电动机(IC611)

OAA4 SERIES HIGH VOLTAGE（10kV、11kV) THREE-PHASE INDUCTION MOTORS(IC611)

电机型号 Motor Type	功率 Rated Power		额定转速 Rated Speed	效率 Efficiency	功率因数 Power Factor	电流 Current			转矩 Torque			转动惯量 Moment of inertia(J)	重量 Approx WT
						Full Load 10kV	Full Load 11kV	Locked Rotor	Full Load	Locked Rotor	Pull Out		
	KW	(HP)	RPM	%	%	A	A	%FLC	Kg-m	%FLT	%FLC	Kg-m²	Kg
OAA4-400F1-02P	200	270	2975	92.9	85	14.6	13.3	750	66	60	180	8.5	2850
OAA4-400F2-02P	220	295	2975	93.0	85	16.1	14.6	750	72	60	180	8.5	2900
OAA4-400F3-02P	250	335	2975	93.2	85	18.2	16.6	750	82	60	180	8.5	2900
OAA4-400F4-02P	280	375	2975	93.5	85	20.3	18.5	700	92	60	180	9.3	3030
OAA4-400F5-02P	315	420	2975	93.7	85	22.8	20.8	700	103	60	180	9.3	3030
OAA4-400F6-02P	355	475	2980	94.0	86	25.4	23.0	700	116	60	180	9.9	3160
OAA4-400F7-02P	400	535	2980	94.2	86	28.5	25.9	700	131	60	180	10.5	3290
OAA4-450F1-02P	450	605	2980	94.4	86	32.0	29.1	700	147	60	180	10.8	3460
OAA4-450F2-02P	500	670	2980	94.5	86	35.5	32.3	700	164	60	180	10.8	3460
OAA4-450F3-02P	560	750	2980	94.7	86	39.7	36.1	700	183	60	180	12.2	3650
OAA4-450F4-02P	630	845	2980	94.7	87	44.1	40.1	700	206	60	180	11.9	3650
OAA4-450F5-02P	710	950	2980	94.8	87	49.7	45.2	700	232	60	180	13.0	3880
OAA4-500F1-02P	800	1070	2980	95.0	87	55.9	50.8	700	262	60	180	18.3	4680
OAA4-500F2-02P	900	1210	2980	95.1	87	62.8	57.1	700	294	60	180	19.8	4900
OAA4-500F3-02P	1000	1340	2980	95.2	87	69.7	63.4	700	327	60	180	21.2	5100
OAA4-500F4-02P	1120	1500	2980	95.3	87	78.0	70.9	700	366	60	180	23.2	5400
OAA4-560F1-02P	1250	1680	2980	95.5	87	86.9	79.0	700	409	60	180	37.2	6330
OAA4-560F2-02P	1400	1880	2982	95.7	87	97.1	88.3	700	458	60	180	39.4	6600
OAA4-560F3-02P	1600	2140	2982	95.7	88	109.7	99.7	700	523	60	180	41.6	6820
OAA4-560F4-02P	1800	2410	2982	95.8	88	123.3	112.1	700	588	60	180	43.8	7030
OAA4-630F1-02P	2000	2680	2982	96.0	88	136.7	124.3	700	654	60	180	79.0	9990
OAA4-630F2-02P	2240	3000	2982	96.2	88	152.8	138.9	700	732	60	180	82.2	10270
OAA4-630F3-02P	2500	3350	2982	96.2	88	170.5	155.0	700	817	60	180	86.3	10550
OAA4-400F1-04P	200	270	1485	92.6	83	15.0	13.7	700	131	70	180	16.8	2900
OAA4-400F2-04P	220	295	1485	92.8	83	16.5	15.0	700	144	70	180	16.8	2900
OAA4-400F3-04P	250	335	1485	93.0	83	18.7	17.0	700	164	70	180	18.3	3030
OAA4-400F4-04P	280	375	1485	93.2	83	20.9	19.0	700	184	70	180	19.7	3130
OAA4-400F5-04P	315	420	1485	93.5	83	23.4	21.3	700	207	70	180	19.7	3130
OAA4-400F6-04P	355	475	1485	93.6	86	25.5	23.1	700	233	70	180	21.0	3230
OAA4-400F7-04P	400	535	1485	93.7	86	28.7	26.1	700	262	70	180	22.5	3360
OAA4-450F1-04P	450	605	1485	94.1	86	32.1	29.2	700	295	70	180	22.8	3610
OAA4-450F2-04P	500	670	1485	94.1	86	35.7	32.4	700	328	70	180	24.5	3740
OAA4-450F3-04P	560	750	1485	94.4	86	39.8	36.2	700	367	70	180	27.0	3900
OAA4-450F4-04P	630	845	1485	94.6	86	44.7	40.6	700	413	70	180	29.1	4070
OAA4-450F5-04P	710	950	1485	95.1	86	50.1	45.6	700	466	70	180	31.6	4260

OAA4系列高压(10kV、11kV)三相异步电动机(IC611)

OAA4 SERIES HIGH VOLTAGE（10kV、11kV) THREE-PHASE INDUCTION MOTORS(IC611)

电机型号 Motor Type	功率 Rated Power		额定转速 Rated Speed	效率 Efficiency	功率因数 Power Factor	电流 Current			转矩 Torque			转动惯量 Moment of inertia(J)	重量 Approx WT
						Full Load 10kV	Full Load 11kV	Locked Rotor	Full Load	Locked Rotor	Pull Out		
	KW	(HP)	RPM	%	%	A	A	%FLC	Kg-m	%FLT	%FLC	Kg-m²	Kg
OAA4-500F1-04P	800	1070	1485	95.2	87	55.8	50.7	700	525	70	180	55.7	5190
OAA4-500F2-04P	900	1210	1485	95.3	87	62.7	57.0	700	591	70	180	59.2	5350
OAA4-500F3-04P	1000	1340	1490	95.4	87	69.6	63.2	650	654	70	180	64.6	5590
OAA4-500F4-04P	1120	1500	1490	95.5	87	77.8	70.8	650	733	70	180	69.4	5840
OAA4-560F1-04P	1250	1680	1490	95.6	88	85.8	78.0	650	818	70	180	95.7	6820
OAA4-560F2-04P	1400	1880	1490	95.8	88	95.9	87.2	650	916	70	180	101	7040
OAA4-560F3-04P	1600	2140	1492	95.9	88	109.5	99.5	650	1045	60	180	106	7250
OAA4-560F4-04P	1800	2410	1492	96.0	88	123.0	111.8	650	1176	60	180	111	7460
OAA4-630F1-04P	2000	2680	1492	96.2	88	136.4	124.0	650	1306	60	180	160	9850
OAA4-630F2-04P	2240	3000	1492	96.3	88	152.6	138.7	650	1463	60	180	167	10110
OAA4-630F3-04P	2500	3350	1492	96.3	88	170.3	154.8	650	1633	60	180	176	10370
OAA4-400F1-06P	220	295	980	92.7	80	17.1	15.6	600	219	70	180	25.2	3070
OAA4-400F2-06P	250	335	980	92.9	80	19.4	17.7	600	249	70	180	27.0	3180
OAA4-400F3-06P	280	375	980	93.1	80	21.7	19.7	600	278	70	180	29.0	3300
OAA4-450F1-06P	315	420	980	93.4	82	23.7	21.6	600	313	70	180	29.4	3540
OAA4-450F2-06P	355	475	980	93.5	83	26.4	24.0	600	353	70	180	31.4	3640
OAA4-450F3-06P	400	535	995	93.7	83	29.7	27.0	650	392	70	180	34.4	3810
OAA4-450F4-06P	450	605	995	93.8	83	33.4	30.3	650	441	70	180	37.9	4010
OAA4-450F5-06P	500	670	995	94.2	83	36.9	33.6	650	490	70	180	41.3	4200
OAA4-500F1-06P	560	750	995	94.4	84	40.8	37.1	650	548	70	180	61.0	4950
OAA4-500F2-06P	630	845	995	94.7	84	45.7	41.6	650	617	70	180	65.1	5100
OAA4-500F3-06P	710	950	995	94.8	84	51.5	46.8	600	695	70	180	70.6	5340
OAA4-500F4-06P	800	1070	995	95.0	84	57.9	52.6	600	784	70	180	77.0	5570
OAA4-500F5-06P	900	1210	995	95.2	85	64.2	58.4	600	881	70	180	83.4	5850
OAA4-560F1-06P	1000	1340	995	95.3	85	71.3	64.8	600	979	70	180	113	6380
OAA4-560F2-06P	1120	1500	995	95.5	85	79.7	72.4	600	1097	60	180	124	6560
OAA4-560F3-06P	1250	1680	995	95.6	86	87.8	79.8	600	1224	60	180	137	6940
OAA4-560F4-06P	1400	1880	995	95.9	86	98.0	89.1	600	1371	60	180	145	7130
OAA4-630F1-06P	1600	2140	995	96.0	86	111.9	101.7	600	1567	60	180	182	9350
OAA4-630F2-06P	1800	2410	995	96.0	86	125.9	114.4	600	1763	60	180	191	9590
OAA4-630F3-06P	2000	2680	995	96.1	86	139.7	127.0	600	1959	60	180	205	9900
OAA4-630F4-06P	2240	3000	995	96.1	86	156.5	142.3	600	2194	60	180	220	10330
OAA4-450F1-08P	200	270	745	92.4	75	16.7	15.1	550	262	70	180	29.5	3540
OAA4-450F2-08P	220	295	745	92.6	75	18.3	16.6	550	288	70	180	31.4	3640
OAA4-450F3-08P	250	335	745	92.8	75	20.7	18.9	600	327	70	180	34.3	3810

OAA4系列高压(10kV、11kV)三相异步电动机(IC611)

OAA4 SERIES HIGH VOLTAGE（10kV、11kV) THREE-PHASE INDUCTION MOTORS(IC611)

电机型号 Motor Type	功率 Rated Power		额定转速 Rated Speed	效率 Efficiency	功率因数 Power Factor	电流 Current			转矩 Torque			转动惯量 Moment of inertia(J)	重量 Approx WT
						Full Load 10kV	Full Load 11kV	Locked Rotor	Full Load	Locked Rotor	Pull Out		
	KW	(HP)	RPM	%	%	A	A	%FLC	Kg-m	%FLT	%FLC	Kg-m²	Kg
OAA4-450F4-08P	280	375	745	93.0	76	22.9	20.8	600	366	70	180	37.9	4010
OAA4-450F5-08P	315	420	745	93.4	77	25.3	23.0	600	412	70	180	41.3	4200
OAA4-500F1-08P	355	475	745	93.7	77	28.4	25.8	600	464	70	180	60.0	4570
OAA4-500F2-08P	400	535	745	93.8	78	31.6	28.7	600	523	70	180	67.0	4780
OAA4-500F3-08P	450	605	745	93.9	78	35.5	32.2	600	589	70	180	73.0	4990
OAA4-500F4-08P	500	670	745	94.3	79	38.8	35.2	600	654	70	180	80.1	5240
OAA4-500F5-08P	560	750	745	94.5	79	43.3	39.4	600	733	70	180	87.0	5500
OAA4-500F6-08P	630	845	745	94.9	82	46.7	42.5	600	824	70	180	95.1	5740
OAA4-560F1-08P	710	950	745	95.0	82	52.6	47.8	600	929	70	180	165	6760
OAA4-560F2-08P	800	1070	742	95.2	82	59.2	53.8	600	1051	70	180	174	6940
OAA4-560F3-08P	900	1210	742	95.3	82	66.5	60.4	600	1182	70	180	183	7130
OAA4-560F4-08P	1000	1340	742	95.5	82	73.7	67.0	600	1313	70	180	191	7320
OAA4-630F1-08P	1120	1500	742	95.6	83	81.5	74.1	600	1471	70	180	243	9420
OAA4-630F2-08P	1250	1680	742	95.7	83	90.9	82.6	600	1642	70	180	255	9640
OAA4-630F3-08P	1400	1880	742	95.8	83	101.7	92.4	600	1839	70	180	267	9850
OAA4-630F4-08P	1600	2140	742	95.8	83	116.2	105.6	600	2101	70	180	279	10070
OAA4-450F1-10P	200	270	595	92.3	72	17.4	15.8	550	328	70	180	40.7	3870
OAA4-450F2-10P	220	295	595	92.5	72	19.1	17.3	550	360	70	180	43.5	4010
OAA4-500F1-10P	250	335	595	92.7	72	21.6	19.7	550	409	70	180	58.9	4790
OAA4-500F2-10P	280	375	595	93.0	74	23.5	21.4	550	459	70	180	64.1	5010
OAA4-500F3-10P	315	420	595	93.2	74	26.4	24.0	550	516	70	180	70.3	5260
OAA4-500F4-10P	355	475	595	93.4	75	29.3	26.6	550	581	70	180	76.4	5510
OAA4-500F5-10P	400	535	595	93.6	75	32.9	29.9	550	655	70	180	83.4	5760
OAA4-500F6-10P	450	605	595	93.8	76	36.4	33.1	550	737	70	180	90.4	6010
OAA4-560F1-10P	500	670	595	94.0	77	39.9	36.3	550	819	70	180	140	6420
OAA4-560F2-10P	560	750	595	94.1	78	44.1	40.0	550	917	70	180	149	6620
OAA4-560F3-10P	630	845	595	94.3	78	49.5	45.0	600	1032	70	180	166	7040
OAA4-560F4-10P	710	950	595	94.5	78	55.6	50.6	600	1163	70	180	175	7230
OAA4-560F5-10P	800	1070	595	94.8	78	62.5	56.8	600	1310	70	180	183	7440
OAA4-630F1-10P	900	1210	595	95.0	80	68.4	62.2	600	1474	70	180	222	8760
OAA4-630F2-10P	1000	1340	595	95.1	80	75.9	69.0	600	1638	70	180	240	9090
OAA4-630F3-10P	1120	1500	595	95.2	80	84.9	77.2	600	1834	70	180	260	9420
OAA4-630F4-10P	1250	1680	595	95.3	80	94.7	86.1	600	2047	70	180	281	9740
OAA4-630F5-10P	1400	1880	595	95.3	80	106.0	96.4	600	2293	70	180	298	10070
OAA4-500F1-12P	200	270	495	92.2	72	17.4	15.8	550	394	70	180	64.3	5210

OAA4系列高压(10kV、11kV)三相异步电动机(IC611)

OAA4 SERIES HIGH VOLTAGE 10kV (10kV、11kV) THREE-PHASE INDUCTION MOTORS(IC611)

电机型号 Motor Type	功率 Rated Power		额定转速 Rated Speed	效率 Efficiency	功率因数 Power Factor	电流 Current			转矩 Torque			转动惯量 Moment of inertia(J)	重量 Approx WT
						Full Load 10kV	Full Load 11kV	Locked Rotor	Full Load	Locked Rotor	Pull Out		
	KW	(HP)	RPM	%	%	A	A	%FLC	Kg-m	%FLT	%FLC	Kg-m²	Kg
OAA4-500F2-12P	220	295	495	92.4	72	19.1	17.4	550	433	70	180	67.2	5370
OAA4-500F3-12P	250	335	495	92.6	72	21.6	19.7	550	492	70	180	70.0	5550
OAA4-500F4-12P	280	375	495	92.8	72	24.2	22.0	550	551	70	180	72.9	5710
OAA4-500F5-12P	315	420	495	93.0	72	27.2	24.7	550	620	70	180	75.7	5880
OAA4-560F1-12P	355	475	495	93.2	72	30.5	27.8	550	699	70	180	154	6620
OAA4-560F2-12P	400	535	495	93.4	73	33.9	30.8	550	787	70	180	162	6830
OAA4-560F3-12P	450	605	495	93.5	73	38.1	34.6	600	886	70	180	171	7040
OAA4-560F4-12P	500	670	495	93.8	73	42.2	38.3	600	984	70	180	179	7230
OAA4-560F5-12P	560	750	495	94.1	74	46.4	42.2	600	1102	70	180	187	7440
OAA4-630F1-12P	630	845	495	94.3	74	52.1	47.4	600	1240	70	180	215	8540
OAA4-630F2-12P	710	950	495	94.5	74	58.6	53.3	600	1398	70	180	236	8870
OAA4-630F3-12P	800	1070	495	94.8	74	65.8	59.9	600	1575	70	180	254	9190
OAA4-630F4-12P	900	1205	495	94.8	74	74.1	67.3	600	1772	70	180	271	9520
OAA4-630F5-12P	1000	1340	495	94.8	74	82.3	74.8	600	1969	70	180	292	9850

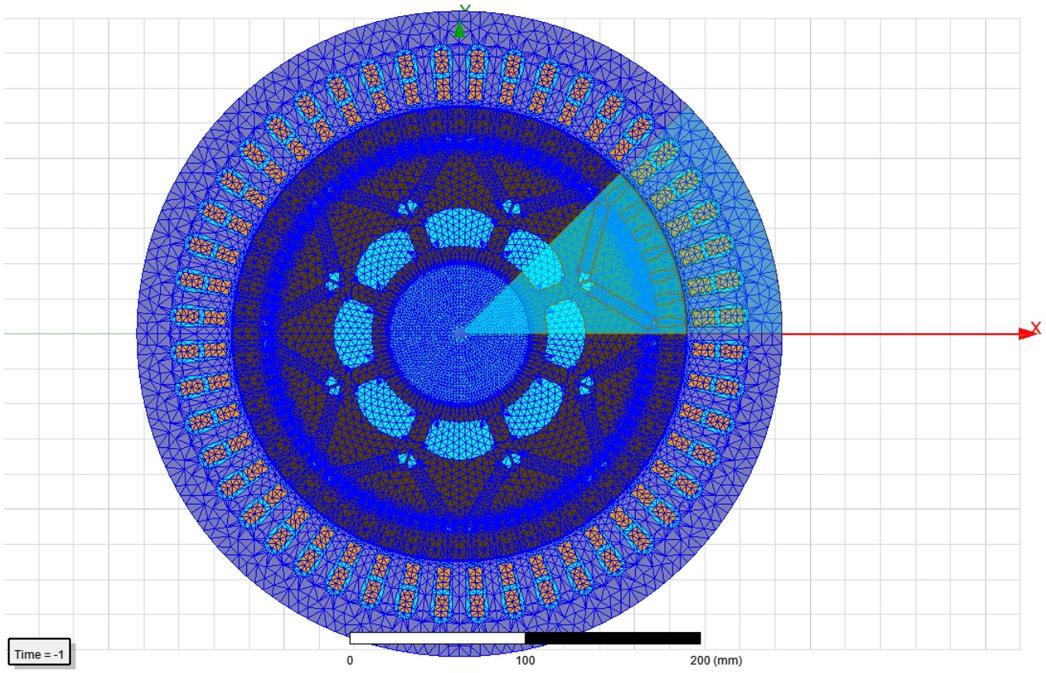

OAA3、OAA4系列高压(6kV)三相异步电动机(IC611)

OAA3、OAA4 SERIES HIGH VOLTAGE (6kV) THREE-PHASE INDUCTION MOTORS(IC611)

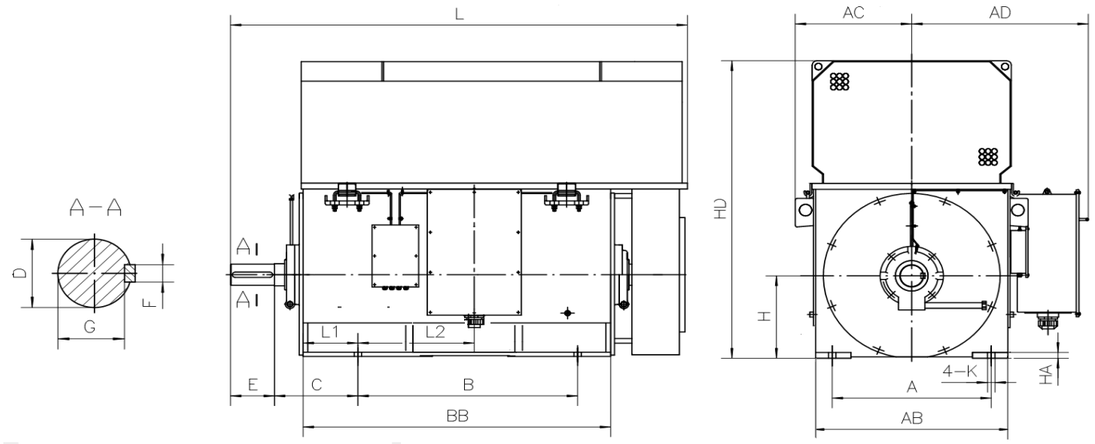

• 安装尺寸表MOUNTING DIMENSIONS FOR INSTALLATION

机座号 Frame	极 数 unting Dim	安装尺寸 Installation Dimensions												
		A	B	C	D		E	F		G		H		K1	
315	2	560±1.75	800±1.75	280±4	65	+0.030 +0.011	140±0.5	18	0 -0.043	58	0 -0.2	315	0 -1	28	+0.62 0
315	4	560±1.75	800±1.75	280±4	80	+0.030 +0.011	170±0.5	22	0 -0.052	71	0 -0.2	315	0 -1	28	+0.62 0
355	2	630±1.75	900±1.75	315±4	80	+0.030 +0.011	170±0.5	22	0 -0.052	71	0 -0.2	355	0 -1	28	+0.62 0
355	4～6	630±1.75	900±1.75	315±4	100	+0.035 +0.013	210±0.5	28	0 -0.052	90	0 -0.2	355	0 -1	28	+0.62 0
400	2	710±1.75	1000±1.75	375±4	90	+0.035 +0.013	170±0.5	25	0 -0.052	81	0 -0.2	400	0 -1	35	+0.62 0
400	4～8	710±1.75	1000±1.75	335±4	110	+0.035 +0.013	210±0.57	28	0 -0.052	100	0 -0.2	400	0 -1	35	+0.62 0
450	2	800±1.75	1120±1.75	400±4	100	+0.035 +0.013	210±0.57	28	0 -0.052	90	0 -0.2	450	0 -1	35	+0.62 0
450	4	800±1.75	1120±1.75	355±4	120	+0.035 +0.013	210±0.57	32	0 -0.062	109	0 -0.2	450	0 -1	35	+0.62 0
450	6～12	800±1.75	1120±1.75	355±4	130	+0.040 +0.015	250±0.57	32	0 -0.062	119	0 -0.2	450	0 -1	35	+0.62 0
500	2	900±2.1	1250±2.1	560±4	110	+0.035 +0.013	210±0.57	28	0 -0.052	100	0 -0.2	500	0 -1	42	+0.62 0
500	4	900±2.1	1250±2.1	475±4	130	+0.04 +0.015	250±0.57	32	0 -0.062	119	0 -0.2	500	0 -1	42	+0.62 0
500	6～10	900±2.1	1250±2.1	475±4	140	+0.04 +0.015	250±0.57	36	0 -0.062	128	0 -0.3	500	0 -1	42	+0.62 0
560	2	1000±2.1	1400±2.1	560±4	130	+0.04 +0.015	250±0.57	32	0 -0.062	119	0 -0.2	560	0 -1	42	+0.62 0
560	4	1000±2.1	1400±2.1	500±4	150	+0.04 +0.015	250±0.57	36	0 -0.062	138	0 -0.3	560	0 -1	42	+0.62 0
560	6～12	1000±2.1	1400±2.1	500±4	160	+0.04 +0.015	300±0.65	40	0 -0.062	147	0 -0.3	560	0 -1	42	+0.62 0
630	2	1120±2.1	1600±2.1	560±4	140	+0.04 +0.015	250±0.57	36	0 -0.062	128	0 -0.3	630	0 -1	48	+0.62 0
630	4	1120±2.1	1600±2.1	530±4	170	+0.04 +0.015	300±0.65	40	0 -0.062	157	0 -0.3	630	0 -1	48	+0.62 0
630	6～12	1120±2.1	1600±2.1	530±4	180	+0.04 +0.015	300±0.65	45	0 -0.062	165	0 -0.3	630	0 -1	48	+0.62 0

• 外形尺寸表OUTLINE DIMENSIONS FOR INSTALLATION

机座号 Frame	极 数 unting Dim	外形尺寸 Outline Dimensions								
		AC	AD	AB	BB	HA	HD	L1	L2	L
315	2	475	730	720	1300	25	1310	168	480	1950
315	4	475	730	720	1300	25	1310	168	480	1950
355	2	500	760	768	1350	30	1400	190	610	2010
355	4～6	500	760	768	1400	25	1400	190	610	2100
400	2	570	900	888	1450	36	1465	250	550	2200
400	4～6	570	900	888	1510	30	1465	210	620	2240
450	2	600	926	968	1530	40	1650	280	625	2280
450	4	600	926	968	1638	32	1650	220	740	2370
450	4~12	600	926	968	1638	32	1650	220	740	2440
500	2	670	1115	1092	1720	50	1810	310	650	2870
500	4	670	1000	1092	1720	35	1810	310	670	2595
500	6～12	670	1000	1092	1720	35	1810	310	670	2600
560	2	740	1200	1196	1938	55	2120	270	810	3400
560	4	740	1050	1196	1938	45	2120	320	760	2840
560	6~12	740	1050	1196	1938	45	2120	320	760	2890
630	2	825	1350	1376	2080	55	2155	265	920	3430
630	4～12	825	1150	1376	2120	50	2155	365	820	3120

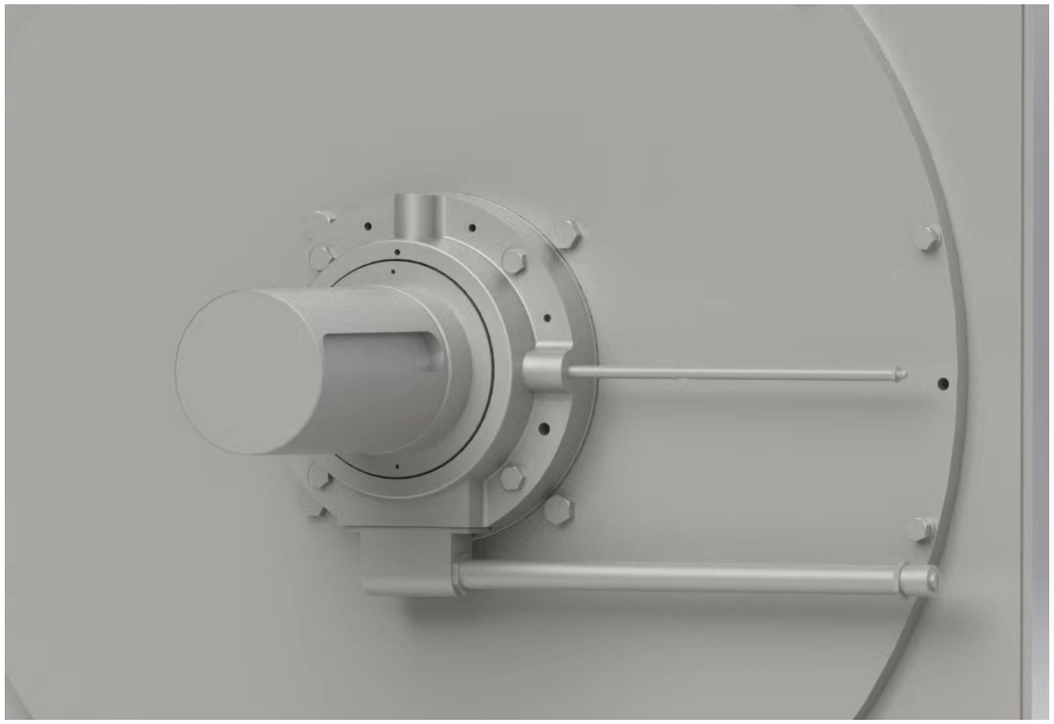

OAA3、OAA4系列高压(10kV)三相异步电动机(IC611)

OAA3、OAA4 SERIES HIGH VOLTAGE (10kV) THREE-PHASE INDUCTION MOTORS(IC611)

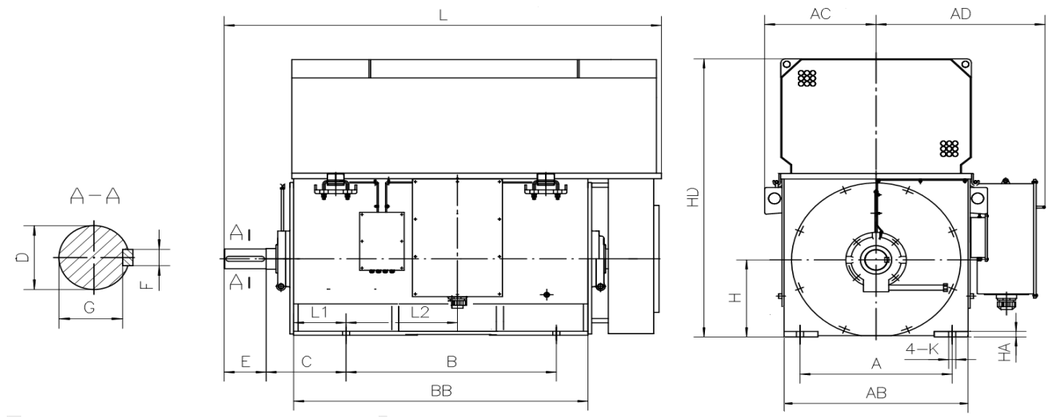

• 安装尺寸表MOUNTING DIMENSIONS FOR INSTALLATION

机座号 Frame	极 数 unting Dim	安装尺寸 Installation Dimensions														
		A	B	C	D		E	F		G		H		K1	
400	2	710±1.75	1000±1.75	375±4	90	+0.030 +0.011	170±0.5	25	0 -0.052	81	0 -0.2	400	0 -1	35	+0.62 0
400	4～8	710±1.75	1000±1.75	335±4	110	+0.035 +0.013	210±0.57	28	0 -0.052	100	0 -0.2	400	0 -1	35	+0.62 0
450	2	800±1.75	1120±1.75	400±4	90	+0.035 +0.013	170±0.57	25	0 -0.052	81	0 -0.2	450	0 -1	35	+0.62 0
450	4～8	800±1.75	1120±1.75	355±4	110	+0.035 +0.013	210±0.57	28	0 -0.062	100	0 -0.2	450	0 -1	35	+0.62 0
500	2	900±2.1	1250±2.1	560±4	100	+0.035 +0.013	210±0.57	28	0 -0.052	90	0 -0.2	500	0 -1	42	+0.62 0
500	4	900±2.1	1250±2.1	475±4	130	+0.04 +0.015	250±0.57	32	0 -0.062	119	0 -0.2	500	0 -1	42	+0.62 0
500	6～12	900±2.1	1250±2.1	475±4	130	+0.04 +0.015	250±0.57	32	0 -0.062	119	0 -0.3	500	0 -1	42	+0.62 0
560	2	1000±2.1	1400±2.1	560±4	130	+0.04 +0.015	250±0.57	32	0 -0.062	119	0 -0.2	560	0 -1	42	+0.62 0
560	4	1000±2.1	1400±2.1	500±4	150	+0.04 +0.015	250±0.57	36	0 -0.062	138	0 -0.3	560	0 -1	42	+0.62 0
560	6～12	1000±2.1	1400±2.1	500±4	160	+0.04 +0.015	300±0.65	40	0 -0.062	147	0 -0.3	560	0 -1	42	+0.62 0
630	2	1120±2.1	1600±2.1	560±4	140	+0.04 +0.015	250±0.57	36	0 -0.062	128	0 -0.3	630	0 -1	48	+0.62 0
630	4	1120±2.1	1600±2.1	530±4	170	+0.04 +0.015	300±0.65	40	0 -0.062	157	0 -0.3	630	0 -1	48	+0.62 0
630	6～12	1120±2.1	1600±2.1	530±4	180	+0.04 +0.015	300±0.65	45	0 -0.062	165	0 -0.3	630	0 -1	48	+0.62 0

• 外形尺寸表OUTLINE DIMENSIONS FOR INSTALLATION

机座号 Frame	极 数 unting Dim	外形尺寸 Outline Dimensions								
		AC	AD	AB	BB	HA	HD	L1	L2	L
400	2	570	900	888	1450	36	1465	250	550	2200
400	4～6	570	900	888	1510	30	1465	210	620	2240
450	2	600	930	968	1530	40	1650	280	625	2280
450	4~8	600	930	968	1638	32	1650	220	740	2440
500	2	670	1000	1092	1720	50	1810	310	650	2870
500	4	670	1000	1092	1720	35	1810	310	670	2595
500	6～12	670	1000	1092	1720	35	1810	310	670	2600
560	2	740	1050	1196	1938	55	2120	270	810	3400
560	4	740	1050	1196	1938	45	2120	320	760	2840
560	6~12	740	1050	1196	1938	45	2120	320	760	2890
630	2	825	1150	1376	2080	55	2155	265	920	3430
630	4～12	825	1150	1376	2120	50	2155	365	820	3120

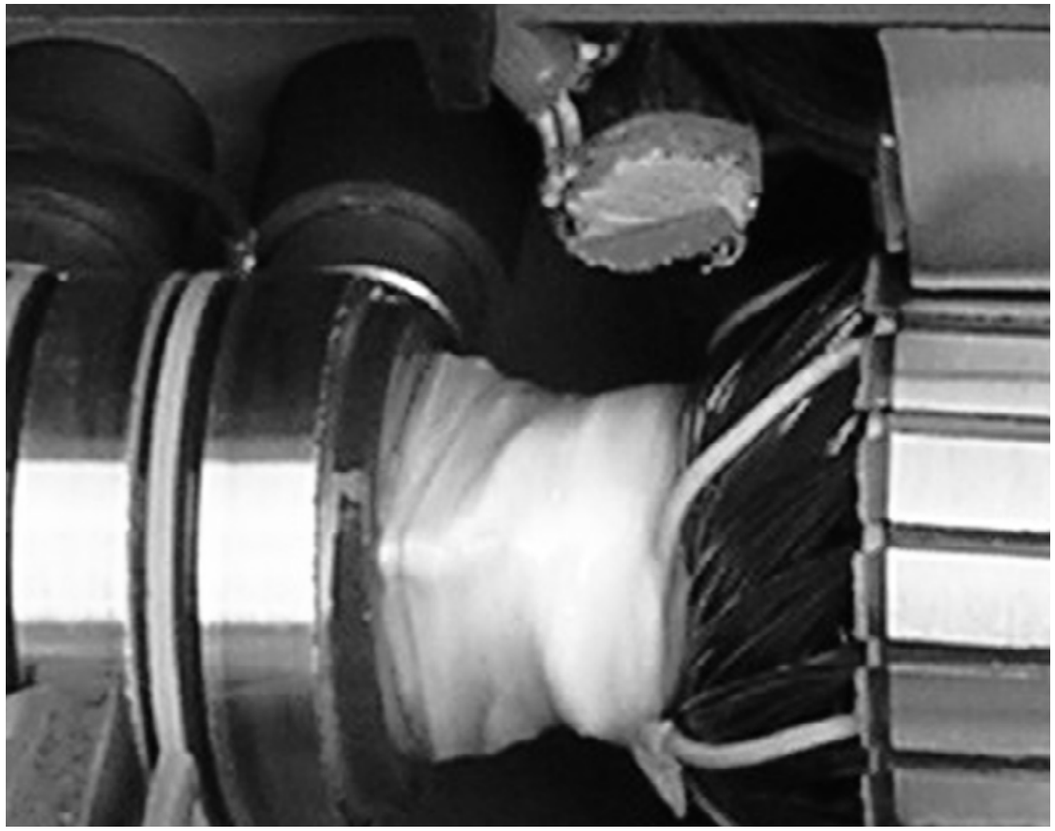

OAA3系列大型高压三相异步电动机(IC611)

OAA3 SERIES LARGE SIZE HIGH VOLTAGE THREE-PHASE INDUCTION MOTORS

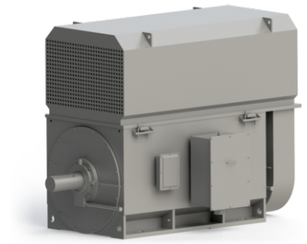

功率范围（Power）：710-9000KW；
机座范围（Frame）：H710-900。

基本技术要求及特点

- 防护等级：IP55
- 冷却方式：IC611(可派生IC616、IC666)
- 安装形式：B3(可派生V10)
- 绝缘等级：F级，温升按B级考核；
- 工作制：S1
- 电压等级：6000V,10000V;（可派生客户指定的电压）；
- 频率：50Hz（可派生60Hz，或指定的频率）
- 同步转速：1500、1000、750、600、500、375rpm (可派生客户指定的转速)；
- 电动机符合GB/T13957《大型三相异步电动机基本系列技术条件》标准的要求。

使用环境

- 海拔不超过1000m(可派生指定海拔高度使用的环境)。
- 环境空气温度：-20℃至+40℃
- 环境空气湿度：月平均最高相对湿度为90%，同时平均温度不高于25℃
- 环境场所：无可燃性气体、无粉尘场所，可派生适应户外环境用"W"型，湿热带环境用"TH"型，户外湿热带环境用"WTH"型，户外中度防腐"WF1"型等。

电源

- 允许电压波动+5%，频率波动±2%，电压和频率合并波动+5%；

结构

- 电动机采用钢板焊接结构，美观大方；
- 电动机设置不停机注排油装置；
- 电动机设置轴承测温pt100；绕组测温pt100等附件；
- 采用优质进口滚动轴承结构（H500/H560/H630-2P电机采用优质的滑动轴承），维修、安装方便；
- 定子绕组经VPI处理，具有良好的电气性能和防潮能力。

Technical characteristics

- Protection class: IP55;
- Cooling method: IC611, (IC616, IC666 can be derived);
- Installation form: B3 (V10 can be derived);
- Insulation class: F class, the temperature rise is assessed according to B class;
- Working system: S1;
- Voltage class: 6000V, 10000V; (customer-specified voltage can be derived);
- Frequency: 50Hz (60Hz can be derived, or specified frequency);
- Synchronous speed: 1500, 1000, 750, 600, 500, 375rpm (customer-specified speed can be derived);
- The motor meets the requirements of GB/T13957 "Technical Conditions for Basic Series of Large Three-phase Asynchronous Motors".

Environment

- The altitude does not exceed 1000m (the environment for use at the specified altitude can be derived);
- Ambient air temperature: -20°C to +40°C ;
- Ambient air humidity: the monthly average maximum relative humidity is 90%, and the monthly average temperature is not higher than 25℃;
- Environmental place: no flammable gas, no dust place ("W" type for outdoor environment, "TH" type for humid tropical environment, "WTH" type for outdoor humid tropical environment, outdoor moderate anticorrosion "WF1" type Wait).

Power supply

- Allowable voltage fluctuation ±5%, frequency fluctuation ±2%, combined voltage and frequency fluctuation ±5%.

Structure

- The motor adopts steel plate welding structure, which is beautiful and elegant;
- The motor is equipped with a non-stop oil injection and discharge device;
- Motor set bearing temperature measurement pt100; winding temperature measurement pt100 and other accessories;
- Adopt high-quality imported rolling bearing structure (or domestic high-quality sliding), easy maintenance and installation;
- The rotor adopts copper cage structure, with low loss and high reliability;
- The stator winding is treated with VPI, which has good electrical performance and moisture resistance.

OAA3 系列大型高压(6kV)三相异步电动机(IC611)

OAA3 SERIES LARGE SIZE HIGH VOLTAGE (6kV) THREE-PHASE INDUCTION MOTORS (IC611)

电机型号 Motor Type	功率 Rated Power		额定转速 Rated Speed	效率 Efficiency	功率因数 Power Factor	电流 Current			转矩 Torque			重量 Approx WT
						Full Load	Locked Rotor	Locked Rotor	Full Load	Locked Rotor	Pull Out	
	KW	(HP)	RPM	%	%	A	A	%FLC	Kg-m	%FLT	%FLC	Kg
OAA3-710F1-04P	3550	4760	1490	96.0	87.0	409.0	2659	650	2322	50	180	13300
OAA3-710F2-04P	4000	5330	1490	96.1	87.0	460.4	2992	650	2616	50	180	13900
OAA3-710F3-04P	4500	6000	1490	96.1	88.0	512.0	3328	650	2943	50	180	14500
OAA3-800F1-04P	5000	6670	1490	96.2	88.0	568.3	3694	650	3270	50	180	17900
OAA3-800F2-04P	5600	7470	1490	96.2	88.0	636.5	4138	650	3663	50	180	18700
OAA3-800F3-04P	6300	8400	1490	96.3	88.0	715.4	4650	650	4120	50	180	19400
OAA3-900F1-04P	7100	9470	1490	96.4	88.0	805.4	5235	650	4644	50	180	23500
OAA3-900F2-04P	8000	10700	1490	96.5	88.0	906.5	5892	650	5232	50	180	24500
OAA3-900F3-04P	9000	12000	1490	96.5	88.0	1019.8	6629	650	5886	50	180	25500
OAA3-710F1-06P	2500	3330	994	95.8	86.0	292.0	1898	650	2451	60	180	12400
OAA3-710F2-06P	2800	3730	994	95.9	86.0	326.7	2124	650	2745	60	180	13000
OAA3-710F3-06P	3150	4200	994	95.9	86.0	367.5	2389	650	3088	60	180	13500
OAA3-710F4-06P	3550	4760	994	96.0	86.0	413.8	2690	650	3480	60	180	14000
OAA3-800F1-06P	4000	5330	994	96.0	86.0	466.2	3030	650	3921	60	180	17300
OAA3-800F2-06P	4500	6000	994	96.1	86.0	524.0	3406	650	4412	60	180	18000
OAA3-800F3-06P	5000	6670	994	96.1	87.0	575.5	3741	650	4902	60	180	18700
OAA3-900F1-06P	5600	7470	994	96.2	87.0	643.9	4185	650	5490	60	180	22700
OAA3-900F2-06P	6300	8400	994	96.1	87.0	725.1	4713	650	6176	60	180	23600
OAA3-900F3-06P	7100	9470	994	96.2	87.0	816.3	5306	650	6961	60	180	24500
OAA3-900F4-06P	8000	10700	994	96.3	87.0	918.9	5973	650	7843	60	180	25400
OAA3-710F1-08P	2000	2670	740	95.5	85.0	237.1	1541	650	2634	60	180	12400
OAA3-710F2-08P	2240	3000	740	95.6	85.0	265.3	1724	650	2950	60	180	13000
OAA3-710F3-08P	2500	3330	740	95.7	85.0	295.7	1922	650	3292	60	180	13500
OAA3-800F1-08P	2800	3730	740	95.7	85.0	331.2	2153	650	3687	60	180	16800
OAA3-800F2-08P	3150	4200	740	95.8	86.0	367.9	2391	650	4148	60	180	17500
OAA3-800F3-08P	3550	4760	740	95.9	86.0	414.2	2692	650	4675	60	180	18200
OAA3-900F1-08P	4000	5330	740	96.0	86.0	466.2	3030	650	5268	60	180	21700
OAA3-900F2-08P	4500	6000	740	96.1	86.0	524.0	3406	650	5926	60	180	22600
OAA3-900F3-08P	5000	6670	740	96.1	86.0	582.2	3784	650	6584	60	180	23400
OAA3-900F4-08P	5600	7470	740	96.2	86.0	651.4	4234	650	7375	60	180	24200

OAA3 系列大型高压(6kV)三相异步电动机(IC611)

OAA3 SERIES LARGE SIZE HIGH VOLTAGE (6kV) THREE-PHASE INDUCTION MOTORS (IC611)

电机型号 Motor Type	功率 Rated Power		额定转速 Rated Speed	效率 Efficiency	功率因数 Power Factor	电流 Current			转矩 Torque			重量 Approx WT
						Full Load	Locked Rotor	Locked Rotor	Full Load	Locked Rotor	Pull Out	
	KW	(HP)	RPM	%	%	A	A	%FLC	Kg-m	%FLT	%FLC	Kg
OAA3-710F1-10P	1800	2400	595	95.1	83.0	219.4	1317	600	2948	60	180	12800
OAA3-710F2-10P	2000	2670	595	95.2	83.0	243.6	1461	600	3276	60	180	13300
OAA3-800F1-10P	2240	3000	595	95.3	83.0	272.5	1635	600	3669	60	180	16600
OAA3-800F2-10P	2500	3330	595	95.4	83.0	303.8	1823	600	4094	60	180	17300
OAA3-800F3-10P	2800	3730	595	95.5	84.0	335.9	2015	600	4586	60	180	17900
OAA3-900F1-10P	3150	4200	595	95.6	84.0	377.5	2265	600	5159	60	180	21700
OAA3-900F2-10P	3550	4760	595	95.7	84.0	425.0	2550	600	5814	60	180	22600
OAA3-900F3-10P	4000	5330	595	95.8	84.0	478.3	2870	600	6551	60	180	23400
OAA3-900F4-10P	4500	6000	595	95.8	84.0	538.1	3229	600	7370	60	180	24200
OAA3-710F1-12P	1250	1670	495	94.6	79.0	161.0	966	600	2461	60	180	12100
OAA3-710F2-12P	1400	1870	495	94.7	79.0	180.1	1080	600	2756	60	180	12600
OAA3-710F3-12P	1600	2130	495	94.7	80.0	203.2	1219	600	3150	60	180	13000
OAA3-800F1-12P	1800	2400	495	94.8	80.0	228.4	1370	600	3544	60	180	16200
OAA3-800F2-12P	2000	2670	495	94.9	80.0	253.5	1521	600	3937	60	180	16800
OAA3-800F3-12P	2240	3000	495	95.0	80.0	283.6	1702	600	4410	60	180	17400
OAA3-900F1-12P	2500	3330	495	95.2	81.0	312.0	1872	600	4922	60	180	21300
OAA3-900F2-12P	2800	3730	495	95.3	81.0	349.0	2094	600	5512	60	180	22100
OAA3-900F3-12P	3150	4200	495	95.4	81.0	392.3	2354	600	6201	60	180	22900
OAA3-710F1-16P	710	950	370	93.3	73.0	100.3	602	600	1870	60	180	11400
OAA3-710F2-16P	800	1070	370	93.4	73.0	112.9	677	600	2107	60	180	11500
OAA3-710F3-16P	900	1200	370	93.5	74.0	125.2	751	600	2370	60	180	11800
OAA3-710F4-16P	1000	1330	370	93.6	74.0	138.9	834	600	2634	60	180	12300
OAA3-800F1-16P	1120	1490	370	93.7	74.0	155.4	933	600	2950	60	180	16200
OAA3-800F2-16P	1250	1670	370	93.8	74.0	173.3	1040	600	3292	60	180	16800
OAA3-800F3-16P	1400	1870	370	93.8	75.0	191.5	1149	600	3687	60	180	17400
OAA3-900F1-16P	1600	2130	370	93.9	75.0	218.6	1312	600	4214	60	180	20000
OAA3-900F2-16P	1800	2400	370	94.0	75.0	245.7	1474	600	4741	60	180	20400
OAA3-900F3-16P	2000	2670	370	94.1	75.0	272.7	1636	600	5268	60	180	20800
OAA3-900F4-16P	2240	3000	370	94.2	75.0	305.1	1831	600	5900	60	180	21600
OAA3-900F5-16P	2500	3330	370	94.3	75.0	340.1	2041	600	6584	60	180	22400

OAA3 系列大型高压(10kV)三相异步电动机(IC611)

OAA3 SERIES LARGE SIZE HIGH VOLTAGE (10kV) THREE-PHASE INDUCTION MOTORS (IC611)

电机型号 Motor Type	功率 Rated Power		额定转速 Rated Speed	效率 Efficiency	功率因数 Power Factor	电流 Current			转矩 Torque			重量 Approx WT
						Full Load	Locked Rotor	Locked Rotor	Full Load	Locked Rotor	Pull Out	
	KW	(HP)	RPM	%	%	A	A	%FLC	Kg-m	%FLT	%FLC	Kg
OAA3-710F1-04P	3150	4200	1488	95.5	86.0	221.4	1439	650	2063	60	180	13300
OAA3-710F2-04P	3500	4760	1488	95.6	87.0	243.0	1579	650	2292	60	180	13900
OAA3-710F3-04P	4000	5330	1488	95.7	87.0	277.4	1803	650	2620	60	180	14500
OAA3-800F1-04P	4500	6000	1488	95.8	87.0	311.7	2026	650	2947	60	180	17900
OAA3-800F2-04P	5000	6670	1488	95.9	87.0	346.0	2249	650	3274	60	180	18700
OAA3-800F3-04P	5600	7470	1488	96.0	87.0	387.1	2516	650	3667	60	180	19400
OAA3-900F1-04P	6300	8400	1488	96.1	87.0	435.1	2828	650	4126	60	180	23500
OAA3-900F2-04P	7100	9470	1488	96.2	87.0	489.8	3184	650	4650	60	180	24500
OAA3-900F3-04P	8000	10700	1488	96.3	87.0	551.3	3584	650	5239	60	180	25500
OAA3-710F1-06P	2240	3000	993	95.4	84.0	161.4	1049	650	2198	60	180	12400
OAA3-710F2-06P	2500	3330	993	95.5	84.0	179.9	1170	650	2453	60	180	13000
OAA3-710F3-06P	2800	3730	993	95.6	84.0	201.3	1309	650	2748	60	180	13500
OAA3-710F4-06P	3150	4200	993	95.7	84.0	226.2	1471	650	3091	60	180	14200
OAA3-800F1-06P	3500	4760	993	95.8	84.0	251.1	1632	650	3435	60	180	17300
OAA3-800F2-06P	4000	5330	993	95.9	86.0	280.0	1820	650	3925	60	180	18000
OAA3-800F3-06P	4500	6000	993	95.9	86.0	315.0	2048	650	4416	60	180	18700
OAA3-900F1-06P	5000	6670	993	96.0	86.0	349.7	2273	650	4907	60	180	22700
OAA3-900F2-06P	5600	7470	993	96.1	86.0	391.2	2543	650	5496	60	180	23600
OAA3-900F3-06P	6300	8400	993	96.2	86.0	439.7	2858	650	6183	60	180	24500
OAA3-900F4-06P	7100	9470	993	96.3	86.0	495.0	3217	650	6968	60	180	25400
OAA3-710F1-08P	1800	2400	740	95.3	83.0	131.4	854	650	2370	60	180	12400
OAA3-710F2-08P	2000	2670	740	95.3	83.0	146.0	949	650	2634	60	180	13000
OAA3-710F3-08P	2240	3000	740	95.4	83.0	163.3	1062	650	2950	60	180	13500
OAA3-800F1-08P	2500	3330	740	95.1	83.0	182.9	1189	650	3292	60	180	16800
OAA3-800F2-08P	2800	3730	740	95.2	84.0	202.2	1314	650	3687	60	180	17500
OAA3-800F3-08P	3150	4200	740	95.3	84.0	227.2	1477	650	4148	60	180	18200
OAA3-900F1-08P	3550	4760	740	95.4	84.0	255.8	1663	650	4675	60	180	21700
OAA3-900F2-08P	4000	5330	740	95.5	84.0	287.9	1871	650	5268	60	180	22600
OAA3-900F3-08P	4500	6000	740	95.6	84.0	323.5	2103	650	5926	60	180	23400
OAA3-900F4-08P	5000	6670	740	95.7	84.0	359.1	2334	650	6584	60	180	24200

OAA3 系列大型高压(10kV)三相异步电动机(IC611)

OAA3 SERIES LARGE SIZE HIGH VOLTAGE (10kV) THREE-PHASE INDUCTION MOTORS (IC611)

电机型号 Motor Type	功率 Rated Power		额定转速 Rated Speed	效率 Efficiency	功率因数 Power Factor	电流 Current			转矩 Torque			重量 Approx WT
						Full Load	Locked Rotor	Locked Rotor	Full Load	Locked Rotor	Pull Out	
	KW	(HP)	RPM	%	%	A	A	%FLC	Kg-m	%FLT	%FLC	Kg
OAA3-710F1-10P	1800	2400	595	95.1	83.0	219.4	1317	600	2948	60	180	12800
OAA3-710F2-10P	2000	2670	595	95.2	83.0	243.6	1461	600	3276	60	180	13300
OAA3-800F1-10P	2240	3000	595	95.3	83.0	272.5	1635	600	3669	60	180	16600
OAA3-800F2-10P	2500	3330	595	95.4	83.0	303.8	1823	600	4094	60	180	17300
OAA3-800F3-10P	2800	3730	595	95.5	84.0	335.9	2015	600	4586	60	180	17900
OAA3-900F1-10P	3150	4200	595	95.6	84.0	377.5	2265	600	5159	60	180	21700
OAA3-900F2-10P	3550	4760	595	95.7	84.0	425.0	2550	600	5814	60	180	22600
OAA3-900F3-10P	4000	5330	595	95.8	84.0	478.3	2870	600	6551	60	180	23400
OAA3-900F4-10P	4500	6000	595	95.8	84.0	538.1	3229	600	7370	60	180	24200
OAA3-710F1-12P	1250	1670	495	94.6	79.0	161.0	966	600	2461	60	180	12100
OAA3-710F2-12P	1400	1870	495	94.7	79.0	180.1	1080	600	2756	60	180	12600
OAA3-710F3-12P	1600	2130	495	94.7	80.0	203.2	1219	600	3150	60	180	13000
OAA3-800F1-12P	1800	2400	495	94.8	80.0	228.4	1370	600	3544	60	180	16200
OAA3-800F2-12P	2000	2670	495	94.9	80.0	253.5	1521	600	3937	60	180	16800
OAA3-800F3-12P	2240	3000	495	95.0	80.0	283.6	1702	600	4410	60	180	17400
OAA3-900F1-12P	2500	3330	495	95.2	81.0	312.0	1872	600	4922	60	180	21300
OAA3-900F2-12P	2800	3730	495	95.3	81.0	349.0	2094	600	5512	60	180	22100
OAA3-900F3-12P	3150	4200	495	95.4	81.0	392.3	2354	600	6201	60	180	22900
OAA3-710F1-16P	630	840	370	93.3	73.0	89.0	534	600	1659	60	180	11400
OAA3-710F1-16P	710	950	370	93.4	73.0	100.2	601	600	1870	60	180	11800
OAA3-710F2-16P	800	1070	370	93.5	74.0	111.3	668	600	2107	60	180	12300
OAA3-710F3-16P	900	1200	370	93.6	74.0	125.0	750	600	2370	60	180	12700
OAA3-710F4-16P	1000	1330	370	93.7	74.0	138.8	833	600	2634	60	180	16200
OAA3-800F1-16P	1120	1490	370	93.8	74.0	155.3	932	600	2950	60	180	16800
OAA3-800F2-16P	1250	1670	370	93.8	75.0	171.0	1026	600	3292	60	180	17400
OAA3-800F3-16P	1400	1870	370	94.0	75.0	191.1	1147	600	3687	60	180	20000
OAA3-900F1-16P	1600	1670	370	93.8	75.0	218.9	1313	600	4214	60	180	20800
OAA3-900F2-16P	1800	1870	370	94.0	75.0	245.7	1474	600	4741	60	180	21600
OAA3-900F3-16P	2000	2130	370	94.1	75.0	272.7	1636	600	5268	60	180	22400

OAA3系列大型空-空冷却三相异步电动机(IC611)

OAA3 SERIES LARGE AIR-TO-AIR COOLING THREE-PHASE INDUCTION MOTORS (IC611)

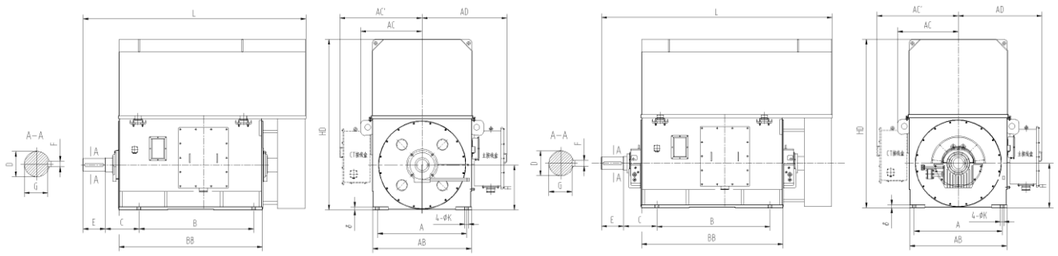

机座号 Frame	安装尺寸 Installation Dimensions																	
	A		B		C		D		E		F		G		H		K	
OAA3-710	1400	+2.8 -2.8	1800	+2.8 -2.8	530	+4.2 -4.2	200	+0.046 +0.017	350	+0.7 -0.7	45	0 -0.062	185	0 -0.3	710	0 -1.5	56	+0.062 0
OAA3-800	1600	+2.8 -2.8	2000	+2.8 -2.8	530	+4.2 -4.2	220	+0.046 +0.017	350	+0.7 -0.7	50	0 -0.062	231	0 -0.3	800	0 -1.5	56	+0.062 0
OAA3-900	1800	+3.5 -3.5	2240	+3.5 -3.5	600	+4.2 -4.2	250	+0.046 +0.017	410	+0.77 -0.77	56	0 -0.074	230	0 -0.3	900	0 -1.5	66	+0.062 0

机座号 Frame	极 数 unting Dim	外形尺寸 Outline Dimensions								图号	轴承 Bearing	
		AC	AC'	AD	AB	BB	δ	HD	L		轴伸端 DE	非轴伸端 NDE
OAA3-710	4P	1000	1350	1380	1600	2250	45	2750	3680	1	18-180B	18-180BJ
	6-16P								3520	2	NU1044+6044	NU1044
OAA3-800	4P	1140	1470	1500	1800	2300	50	3200	3880	1	22-225B	22-225BJ
	6-16P									1	22-225B	22-225BJ
OAA3-900	4P	1280	1620	1650	2050	2500	55	3600	4200	1	22-250B	22-250BJ
	6-16P									1	22-250B	22-250BJ

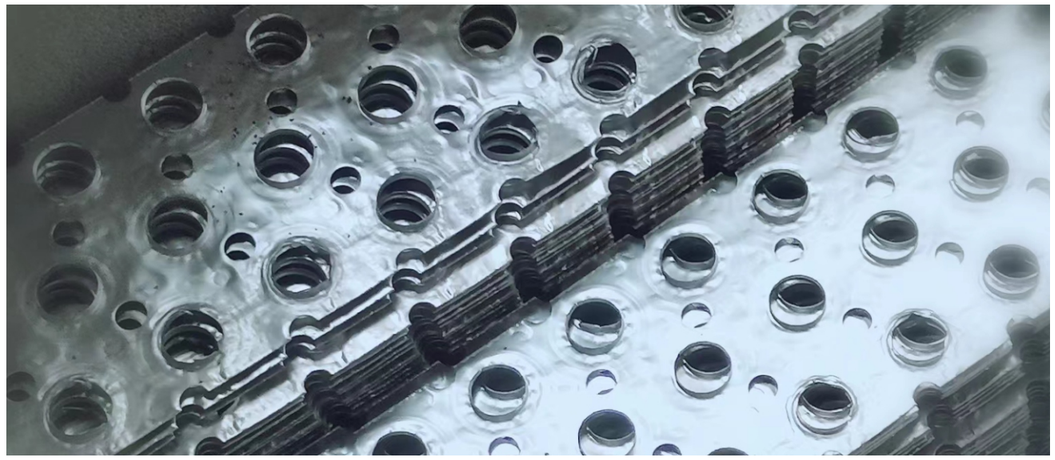

OST3、OST4系列 (IP23) 高压三相异步电动机(IC01)

OST3、OST4 SERIES (IP23) HIGH VOLTAGE THREE-PHASE INDUCTION MOTORS

功率范围（Power）：220-3550KW；
机座范围（Frame）：H355-630。

基本技术要求及特点

- 防护等级:IP23
- 冷却方式：IC01(可派生IC06等)
- 安装形式：B3 (可派生B35、V10)
- 绝缘等级：F级， 温升按B级考核；
- 工作制：S1
- 电压等级：6000V,10000V（可派生客户指定的电压）；
- 频率：50Hz（可派生60Hz，或指定的频率）
- 功率范围：220-3550kW
- OST4系列电动机符合标准：JB/T12728(6kV)、JB/T10446(10kV) 中二级能效的要求(即YX系列)。
- OST3系列电动机符合标准：JB/T12728(6kV)、JB/T10446(10kV)中三级能效的要求(即Y系列)。

使用环境

- 海拔不超过1000m(可派生指定海拔高度使用的环境)；
- 空气温度：-20℃至+40℃；
- 空气湿度：月平均最高相对湿度为90 %，同时月平均温度不高于25℃；
- 环境场所：无可燃性气体、无粉尘场所(可派生适应户外环境用“W”型，湿热带环境用“TH”型,户外湿热带环境用“WTH”型，户外中度防腐“WF1”型等）。

电源

- 允许电压波动±5%，频率波动±2%，电压和频率合并波动±5%。

结构

- 电动机采用钢板焊接结构，美观大方；
- 电动机设置不停机注排油装置；
- 电动机设置轴承测温pt100；绕组测温pt100等附件；
- 采用优质进口的滚动轴承结构（H500/H560/H630-2P电机采用优质的滑动轴承），维修、安装方便；
- 定子绕组经VPI处理，具有良好的电气性能和防潮能力。

Technical characteristics

- Protection class: Ip23;
- Cooling method: IC01 (IC06 can be derived, etc.);
- Installation form: B3 (B35, V10 can be derived);
- Insulation class: F class, the temperature rise is assessed according to B class;
- Working system: S1;
- Voltage class: 6000V, 10000V; (customer-specified voltage can be derived);
- Frequency: 50Hz (60Hz can be derived, or specified frequency); Power range: 220-3550kW;
- OST4 series motors meet the standard Requirements for secondary energy efficiency in JB/T12728 (6kV) and JB/T10446 (10kV) (YX series).
- OST3 series motors meet the standard Requirements for three-level energy efficiency in JB/T12728 (6kV) and JB/T10446 (10kV) (Y series).

Environment

- The altitude does not exceed 1000m (the environment for use at the specified altitude can be derived);
- Ambient air temperature:-20°C to +40°C ;
- Ambient air humidity: the monthly average maximum relative humidity is 90%, and the monthly average temperature is not higher than 25℃;
- Environmental place: No flammable gas, no dust place ("W" type for outdoor environment, "TH" type for humid tropical environment, outdoor humid tropical ring, Environmental use "WTH" type, outdoor moderate anti-corrosion "WF1" type, etc.).

Power supply

- Allowable voltage fluctuation ±5%, frequency fluctuation ±2%, combined voltage and frequency fluctuation ±5%.

Structure

- The motor adopts steel plate welding structure, which is beautiful and elegant;
- The motor is equipped with a non-stop oil injection and discharge device;
- Motor set bearing temperature measurement pt100; winding temperature measurement pt100 and other accessories;
- Adopt high-quality imported rolling bearing structure (H500/H560/H630-2P motor adopts high-quality sliding bearing), which is convenient for maintenance and installation;
- The stator winding is treated with VPI and has good electrical performance and moisture resistance.

OST3系列(IP23) 高压(6kV、6.6kV)三相异步电动机(IC01)

OST3 SERIES (IP23) HIGH VOLTAGE(6kV、6.6kV) THREE-PHASE INDUCTION MOTORS (IC01)

电机型号 Motor Type	功率 Rated Power		额定转速 Rated Speed	效率 Efficiency	功率因数 Power Factor	电流 Current			转矩 Torque			转动惯量 Moment of inertia(J)	重量 Approx WT
						Full Load 6kV	Full Load 6.6kV	Locked Rotor	Full Load	Locked Rotor	Pull Out		
	KW	(HP)	RPM	%	%	A	A	%FLC	Kg-m	%FLT	%FLC	Kg-m²	Kg
OST3-355F1-02P	220	295	2975	92.0	86	26.8	24.3	700	72	60	180	3.4	1940
OST3-355F2-02P	250	335	2975	92.1	86	30.4	27.6	700	82	60	180	3.4	1940
OST3-355F3-02P	280	375	2975	92.3	86	33.9	30.9	700	92	60	180	3.7	2020
OST3-355F4-02P	315	420	2975	92.7	86	38.0	34.6	700	103	60	180	4.0	2080
OST3-355F5-02P	355	475	2975	93.0	86	42.7	38.8	700	116	60	180	4.2	2160
OST3-355F6-02P	400	535	2975	93.4	86	47.9	43.6	700	131	60	180	4.5	2220
OST3-400F1-02P	450	605	2980	93.7	86	53.7	48.9	700	147	60	180	7.8	2490
OST3-400F2-02P	500	670	2980	94.0	87	58.8	53.5	700	164	60	180	8.4	2580
OST3-400F3-02P	560	750	2980	94.1	87	65.8	59.8	700	183	60	180	8.4	2580
OST3-400F4-02P	630	845	2980	94.3	87	73.9	67.2	700	206	60	180	9.1	2700
OST3-400F5-02P	710	950	2980	94.4	87	83.2	75.6	700	232	60	180	9.1	2700
OST3-450F1-02P	800	1070	2980	94.7	87	93.4	84.9	700	262	60	180	10.1	3020
OST3-450F2-02P	900	1210	2980	94.8	87	105.0	95.5	700	294	60	180	10.1	3020
OST3-450F3-02P	1000	1340	2980	94.9	88	115.2	104.8	700	327	60	180	11.2	3210
OST3-450F4-02P	1120	1500	2980	95.0	88	128.9	117.2	700	366	60	180	12.4	3390
OST3-500F2-02P	1250	1680	2980	95.2	88	143.6	130.5	700	409	60	180	18.3	4070
OST3-500F3-02P	1400	1880	2980	95.3	88	160.6	146.0	700	458	60	180	19.7	4230
OST3-500F4-02P	1600	2140	2980	95.4	88	183.4	166.7	700	523	60	180	21.5	4440
OST3-500F5-02P	1800	2410	2980	95.5	88	206.1	187.4	700	589	60	180	23.7	4730
OST3-560F1-02P	2000	2680	2980	95.7	88	228.5	207.8	700	654	60	180	37.5	5890
OST3-560F3-02P	2240	3000	2980	95.8	88	255.7	232.4	700	733	60	180	39.6	6090
OST3-560F5-02P	2500	3350	2982	95.9	89	281.9	256.2	700	817	60	180	41.7	6300
OST3-630F1-02P	2800	3750	2982	96.0	89	315.4	286.7	700	915	60	180	69.0	8180
OST3-630F3-02P	3150	4220	2982	96.1	89	354.4	322.2	700	1029	60	180	74.0	8520
OST3-630F5-02P	3550	4760	2982	96.1	89	399.4	363.1	700	1160	60	180	80.0	8990
OST3-355F1-04P	220	295	1485	92.5	85	26.9	24.5	650	44	80	180	6.3	1910
OST3-355F2-04P	250	335	1485	92.6	85	30.6	27.8	650	164	80	180	6.3	1910
OST3-355F3-04P	280	375	1485	92.7	86	33.8	30.7	650	184	80	180	6.8	1990
OST3-355F4-04P	315	420	1485	92.9	86	37.9	34.5	650	207	80	180	7.3	2070
OST3-355F5-04P	355	475	1485	93.1	86	42.7	38.8	650	233	80	180	7.9	2150
OST3-355F6-04P	400	535	1485	93.3	86	48.0	43.6	650	262	80	180	8.4	2230
OST3-400F1-04P	450	605	1485	93.5	86	53.9	49.0	650	295	80	180	17.1	2520
OST3-400F2-04P	500	670	1485	93.7	87	59.0	53.7	650	328	80	180	18.4	2610
OST3-400F3-04P	560	750	1485	93.9	87	66.0	60.0	650	367	80	180	19.8	2710
OST3-400F4-04P	630	840	1485	94.2	87	74.0	67.2	650	413	70	180	21.1	2840

OST3系列(IP23) 高压(6kV、6.6kV)三相异步电动机(IC01)

OST3 SERIES (IP23) HIGH VOLTAGE(6kV、6.6kV) THREE-PHASE INDUCTION MOTORS (IC01)

电机型号 Motor Type	功率 Rated Power		额定转速 Rated Speed	效率 Efficiency	功率因数 Power Factor	电流 Current			转矩 Torque			转动惯量 Moment of inertia(J)	重量 Approx WT
						Full Load 6kV	Full Load 6.6kV	Locked Rotor	Full Load	Locked Rotor	Pull Out		
	KW	(HP)	RPM	%	%	A	A	%FLC	Kg-m	%FLT	%FLC	Kg-m²	Kg
OST3-400F5-04P	710	950	1485	94.4	87	83.2	75.6	650	1466	70	180	22.8	2960
OST3-450F1-04P	800	1070	1485	94.6	87	93.5	85.0	650	525	80	180	23.0	3100
OST3-450F2-04P	900	1210	1485	94.7	87	105.1	95.6	650	591	80	180	25.3	3290
OST3-450F3-04P	1000	1340	1485	94.8	87	116.7	106.1	650	656	80	180	27.4	3450
OST3-450F4-04P	1120	1500	1485	94.9	88	129.1	117.3	650	735	80	180	29.7	3640
OST3-500F2-04P	1250	1680	1485	95.1	88	143.7	130.7	650	820	70	180	60.2	4780
OST3-500F3-04P	1400	1880	1485	95.2	88	160.8	146.2	650	919	70	180	64.8	5020
OST3-500F4-04P	1600	2140	1485	95.3	89	181.5	165.0	650	1050	60	180	69.4	5260
OST3-500F5-04P	1800	2410	1485	95.4	89	204.0	185.5	650	1181	60	180	73.3	5420
OST3-560F1-04P	2000	2680	1485	95.6	89	226.2	205.6	650	1312	60	180	98.0	6210
OST3-560F3-04P	2240	3000	1485	95.7	89	253.1	230.1	650	1470	60	180	103.0	6420
OST3-560F5-04P	2500	3350	1485	95.8	89	282.2	256.5	650	1641	60	180	108.0	6630
OST3-630F1-04P	2800	3750	1493	95.9	89	315.7	287.0	650	1828	60	180	156.0	8570
OST3-630F3-04P	3150	4220	1493	96.1	89	354.4	322.2	650	2056	60	180	164.0	8820
OST3-630F5-04P	3550	4760	1493	96.1	89	399.4	363.1	650	2317	60	180	172.0	9070
OST3-355F4-06P	220	295	985	92.2	82	28.0	25.5	600	218	80	180	9.9	2060
OST3-355F5-06P	250	335	985	92.5	82	31.7	28.8	600	247	80	180	10.8	2140
OST3-355F6-06P	280	375	985	92.7	83	35.0	31.8	600	277	80	180	11.7	2220
OST3-400F1-06P	315	420	985	93.0	83	39.3	35.7	600	312	80	180	21.6	2500
OST3-400F2-06P	355	475	985	93.2	83	44.2	40.1	600	351	80	180	21.6	2500
OST3-400F3-06P	400	535	985	93.3	83	49.7	45.2	600	396	80	180	23.5	2590
OST3-400F4-06P	450	605	990	93.6	84	55.1	50.1	600	443	80	180	25.9	2720
OST3-400F5-06P	500	670	990	93.9	85	60.3	54.8	600	492	80	180	29.2	2880
OST3-450F1-06P	560	750	990	94.1	85	67.4	61.2	600	551	80	180	32.2	3200
OST3-450F2-06P	630	845	990	94.2	85	75.7	68.8	600	620	80	180	35.2	3390
OST3-450F3-06P	710	950	990	94.4	85	85.1	77.4	600	699	70	180	38.8	3580
OST3-450F4-06P	800	1070	990	94.6	85	95.7	87.0	600	787	70	180	42.6	3770
OST3-500F2-06P	900	1210	990	94.7	85	107.6	97.8	600	886	70	180	56.8	4160
OST3-500F3-06P	1000	1340	990	94.8	85	119.4	108.6	600	984	70	180	60.6	4310
OST3-500F4-06P	1120	1500	991	94.9	86	132.1	120.0	650	1101	70	180	66.0	4540
OST3-500F5-06P	1250	1680	991	95.1	86	147.1	133.7	650	1229	70	180	72.1	4760
OST3-560F1-06P	1400	1880	991	95.2	86	164.5	149.6	650	1377	70	180	115.0	5550
OST3-560F3-06P	1600	2140	993	95.3	86	187.9	170.8	650	1570	70	180	121.0	5740
OST3-560F5-06P	1800	2410	994	95.4	86	211.1	191.9	650	1765	70	180	128.0	5920
OST3-630F2-06P	2000	2680	994	95.6	86	234.1	212.8	650	1961	70	180	160.0	7600

OST3系列(IP23) 高压(6kV、6.6kV)三相异步电动机(IC01)

OST3 SERIES (IP23) HIGH VOLTAGE(6kV、6.6kV) THREE-PHASE INDUCTION MOTORS (IC01)

电机型号 Motor Type	功率 Rated Power		额定转速 Rated Speed	效率 Efficiency	功率因数 Power Factor	电流 Current			转矩 Torque			转动惯量 Moment of inertia(J)	重量 Approx WT
						Full Load 6kV	Full Load 6.6kV	Locked Rotor	Full Load	Locked Rotor	Pull Out		
	KW	(HP)	RPM	%	%	A	A	%FLC	Kg-m	%FLT	%FLC	Kg-m²	Kg
OST3-630F4-06P	2240	3000	994	95.7	86	261.9	238.1	650	2196	70	180	173.0	7950
OST3-630F6-06P	2500	3350	994	95.7	86	292.3	265.7	650	2451	70	180	187.0	8310
OST3-400F1-08P	220	295	740	92.1	78	29.5	26.8	550	290	80	180	21.6	2430
OST3-400F2-08P	250	335	740	92.2	79	33.0	30.0	550	329	80	180	23.5	2530
OST3-400F3-08P	280	375	740	92.4	79	36.9	33.6	550	369	80	180	25.4	2620
OST3-400F4-08P	315	420	740	92.7	80	40.9	37.2	550	415	80	180	27.3	2750
OST3-400F5-08P	355	475	740	92.8	80	46.0	41.8	550	467	80	180	29.1	2850
OST3-450F1-08P	400	535	740	93.0	80	51.7	47.0	550	527	80	180	32.2	3200
OST3-450F2-08P	450	605	740	93.1	81	57.4	52.2	550	593	80	180	35.5	3390
OST3-450F3-08P	500	670	740	93.7	81	63.4	57.6	550	658	80	180	38.8	3580
OST3-450F4-08P	560	750	740	93.8	82	70.1	63.7	550	737	80	180	42.6	3770
OST3-500F2-08P	630	845	740	93.9	82	78.7	71.6	550	830	80	180	68.2	4200
OST3-500F3-08P	710	950	740	94.0	82	88.6	80.6	550	935	80	180	75.0	4440
OST3-500F4-08P	800	1070	740	94.2	84	97.3	88.4	600	1054	70	180	81.8	4690
OST3-500F5-08P	900	1210	740	94.3	84	109.3	99.4	600	1185	70	180	89.4	4930
OST3-560F3-08P	1000	1340	740	94.4	84	121.4	110.3	600	1317	70	180	147.0	5850
OST3-560F4-08P	1120	1500	744	94.5	84	135.8	123.4	600	1467	70	180	155.0	6050
OST3-560F5-08P	1250	1680	744	94.7	84	151.2	137.5	600	1637	70	180	163.0	6250
OST3-630F3-08P	1400	1880	744	94.8	84	169.2	153.8	600	1834	70	180	217.0	7680
OST3-630F4-08P	1600	2140	744	94.9	84	193.1	175.6	600	2096	70	180	229.0	7900
OST3-630F5-08P	1800	2410	744	95.0	84	217.1	197.3	600	2358	70	180	240.0	8110
OST3-630F6-08P	2000	2680	744	95.2	84	240.7	218.8	600	2620	70	180	252.0	8320
OST3-400F3-10P	220	295	590	91.3	77	30.1	27.4	550	363	80	180	29.1	2650
OST3-400F4-10P	250	335	590	91.5	78	33.7	30.6	550	413	80	180	31.3	2740
OST3-400F5-10P	280	375	590	91.7	78	37.7	34.2	550	462	80	180	35.2	2930
OST3-450F1-10P	315	420	590	91.9	79	41.8	38.0	550	520	80	180	38.2	3260
OST3-450F2-10P	355	475	590	92.1	79	47.0	42.7	550	586	80	180	41.0	3390
OST3-450F3-10P	400	535	590	92.6	80	52.0	47.2	550	661	80	180	44.9	3580
OST3-450F4-10P	450	605	590	92.7	80	58.4	53.1	550	743	80	180	44.9	3580
OST3-500F1-10P	500	670	590	93.0	80	64.7	58.8	550	826	80	180	59.7	4220
OST3-500F2-10P	560	750	590	93.1	80	72.4	65.8	550	925	80	180	65.6	4460
OST3-500F3-10P	630	845	590	93.2	80	81.3	73.9	550	1041	80	180	71.5	4700
OST3-500F4-10P	710	950	590	93.4	82	89.2	81.1	600	1173	70	180	78.2	4950
OST3-500F5-10P	800	1070	590	93.7	82	100.2	91.1	600	1321	70	180	84.9	5190
OST3-560F3-10P	900	1210	590	93.8	82	112.6	102.4	600	1487	70	180	155.0	5800

OST3系列(IP23) 高压(6kV、6.6kV)三相异步电动机(IC01)

OST3 SERIES (IP23) HIGH VOLTAGE(6kV、6.6kV) THREE-PHASE INDUCTION MOTORS (IC01)

电机型号 Motor Type	功率 Rated Power		额定转速 Rated Speed	效率 Efficiency	功率因数 Power Factor	电流 Current			转矩 Torque			转动惯量 Moment of inertia(J)	重量 Approx WT
						Full Load 6kV	Full Load 6.6kV	Locked Rotor	Full Load	Locked Rotor	Pull Out		
	KW	(HP)	RPM	%	%	A	A	%FLC	Kg-m	%FLT	%FLC	Kg-m²	Kg
OST3-560F4-10P	1000	1340	594	93.9	82	125.0	113.6	600	1641	70	180	163.0	6050
OST3-560F5-10P	1120	1500	594	94.1	82	139.7	127.0	600	1837	70	180	171.0	6240
OST3-630F3-10P	1250	1680	594	94.4	82	155.4	141.3	600	2051	70	180	224.0	7530
OST3-630F4-10P	1400	1880	594	94.5	82	173.9	158.0	600	2297	70	180	244.0	7900
OST3-630F5-10P	1600	2140	594	94.6	82	198.5	180.4	600	2625	70	180	264.0	8110
OST3-630F6-10P	1800	2410	594	94.7	82	223.1	202.8	600	2953	70	180	281.0	8320
OST3-450F1-12P	220	295	490	90.6	73	32.0	29.1	550	438	80	180	36.3	3200
OST3-450F2-12P	250	335	490	90.9	73	36.3	33.0	550	497	80	180	39.0	3320
OST3-450F3-12P	280	375	490	91.9	74	39.6	36.0	550	557	80	180	42.8	3510
OST3-450F4-12P	315	420	490	92.1	75	43.9	39.9	550	626	80	180	47.2	3740
OST3-500F1-12P	355	475	490	92.3	75	49.3	44.9	550	706	80	180	58.3	4460
OST3-500F2-12P	400	535	490	92.6	75	55.4	50.4	550	796	80	180	61.1	4620
OST3-500F3-12P	450	605	490	92.7	75	62.3	56.6	550	895	80	180	63.8	4790
OST3-500F4-12P	500	670	490	93.1	79	65.4	59.5	600	994	70	180	66.6	4950
OST3-500F5-12P	560	750	490	93.2	79	73.2	66.5	600	1114	70	180	69.3	5110
OST3-560F3-12P	630	845	490	93.3	79	82.2	74.8	600	1253	70	180	159.0	5800
OST3-560F4-12P	710	950	494	93.4	79	92.6	84.2	600	1401	70	180	167.0	5980
OST3-560F5-12P	800	1070	494	93.7	79	104.0	94.5	600	1578	70	180	175.0	6170
OST3-630F3-12P	900	1210	494	93.8	79	116.9	106.2	600	1775	70	180	222.0	7370
OST3-630F4-12P	1000	1340	494	93.9	79	129.7	117.9	600	1973	70	180	239.0	7680
OST3-630F5-12P	1120	1500	494	94.0	79	145.1	131.9	600	2209	70	180	256.0	8000
OST3-630F6-12P	1250	1680	494	94.2	79	161.6	146.9	600	2466	70	180	276.0	8320

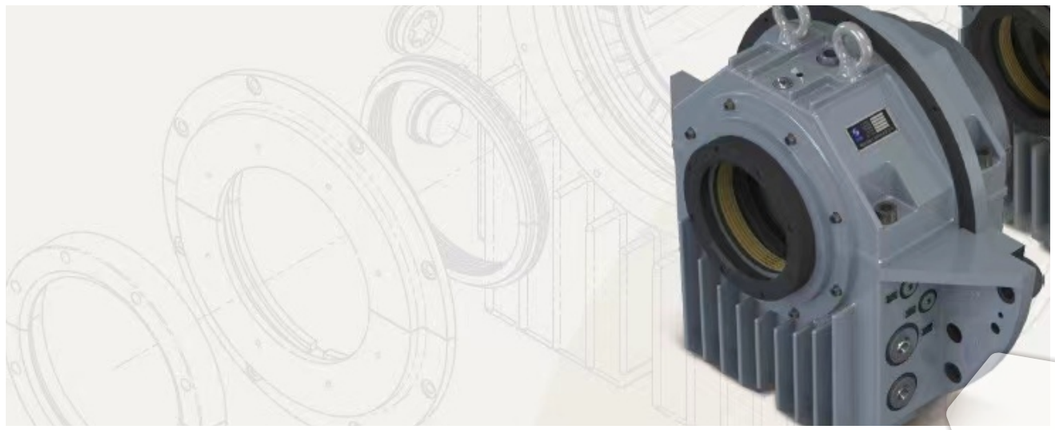

OST3系列(IP23) 高压(10kV、11kV)三相异步电动机(IC01)

OST3 SERIES (IP23) HIGH VOLTAGE(10kV、11kV) THREE-PHASE INDUCTION MOTORS (IC01)

电机型号 Motor Type	功率 Rated Power		额定转速 Rated Speed	效率 Efficiency	功率因数 Power Factor	电流 Current			转矩 Torque			转动惯量 Moment of inertia(J)	重量 Approx WT
						Full Load 10kV	Full Load 11kV	Locked Rotor	Full Load	Locked Rotor	Pull Out		
	KW	(HP)	RPM	%	%	A	A	%FLC	Kg-m	%FLT	%FLC	Kg-m²	Kg
OST3-400F1-02P	220	295	2980	91.9	86	16.1	14.6	750	72	60	180	7.2	2350
OST3-400F2-02P	250	335	2980	92.1	86	18.2	16.6	750	82	60	180	7.2	2360
OST3-400F3-02P	280	375	2980	92.3	86	20.4	18.5	750	92	60	180	7.2	2400
OST3-400F4-02P	315	420	2980	92.7	86	22.8	20.7	750	103	60	180	7.8	2460
OST3-400F5-02P	355	475	2980	93.1	87	25.3	23.0	700	116	60	180	7.8	2490
OST3-400F6-02P	400	535	2980	93.4	87	28.4	25.8	700	131	60	180	8.4	2550
OST3-400F7-02P	450	605	2980	93.6	87	31.9	29.0	700	147	60	180	8.4	2650
OST3-450F2-02P	500	670	2980	93.7	87	35.4	32.2	700	164	60	180	9.2	2830
OST3-450F3-02P	560	750	2980	93.9	87	39.6	36.0	700	183	60	180	9.2	2840
OST3-450F4-02P	630	845	2980	94.0	87	44.5	40.4	700	206	60	180	10.1	3000
OST3-450F5-02P	710	950	2980	94.1	88	49.5	45.0	700	232	60	180	10.1	3100
OST3-450F6-02P	800	1070	2980	94.3	88	55.7	50.6	700	262	60	180	11.2	3190
OST3-500F3-02P	900	1210	2980	94.4	88	62.6	56.9	700	294	60	180	17.0	3880
OST3-500F4-02P	1000	1340	2980	94.5	88	69.4	63.1	700	327	60	180	18.3	4050
OST3-500F5-02P	1120	1500	2980	94.7	88	77.6	70.5	700	366	60	180	19.7	4210
OST3-500F6-02P	1250	1680	2980	94.9	89	85.4	77.7	700	409	60	180	21.6	4460
OST3-500F7-02P	1400	1880	2980	95.1	89	95.5	86.8	700	458	60	180	23.7	4710
OST3-560F4-02P	1600	2140	2980	95.2	89	109.0	99.1	700	523	60	180	35.4	5630
OST3-560F5-02P	1800	2410	2982	95.3	90	121.2	110.2	700	588	60	180	37.5	5840
OST3-560F6-02P	2000	2680	2982	95.5	90	134.3	122.1	700	654	60	180	39.6	6040
OST3-630F3-02P	2240	3000	2982	95.7	90	150.2	136.5	700	732	60	180	69.0	8180
OST3-630F5-02P	2500	3350	2982	95.7	90	167.6	152.4	700	817	60	180	73.0	8450
OST3-630F7-02P	2800	3750	2982	95.7	90	187.7	170.6	700	915	60	180	76.0	8720
OST3-630F9-02P	3150	4220	2982	95.8	90	210.9	191.8	700	1029	60	180	80.0	8990
OST3-400F1-04P	220	295	1480	91.9	85	16.3	14.8	700	145	70	180	15.7	2390
OST3-400F2-04P	250	335	1480	92.1	85	18.4	16.8	700	165	70	180	15.7	2410
OST3-400F3-04P	280	375	1480	92.2	85	20.6	18.8	700	184	70	180	15.7	2450
OST3-400F4-04P	315	420	1480	92.5	85	23.1	21.0	700	207	70	180	17.1	2520
OST3-400F5-04P	355	475	1485	92.6	86	25.7	23.4	700	233	70	180	18.4	2610
OST3-400F6-04P	400	535	1485	92.8	86	28.9	26.3	700	262	70	180	19.8	2710
OST3-400F7-04P	450	605	1485	93.2	86	32.4	29.5	700	295	70	180	21.7	2840
OST3-450F2-04P	500	670	1485	93.3	86	36.0	32.7	700	328	70	180	21.3	3010
OST3-450F3-04P	560	750	1485	93.6	86	40.2	36.5	700	367	70	180	23.0	3100
OST3-450F4-04P	630	845	1485	93.8	86	45.1	41.0	700	413	70	180	25.3	3290
OST3-450F5-04P	710	950	1485	94.4	87	49.9	45.4	700	466	70	180	27.4	3450

OST3系列(IP23) 高压(10kV、11kV)三相异步电动机(IC01)

OST3 SERIES (IP23) HIGH VOLTAGE(10kV、11kV) THREE-PHASE INDUCTION MOTORS (IC01)

电机型号 Motor Type	功率 Rated Power		额定转速 Rated Speed	效率 Efficiency	功率因数 Power Factor	电流 Current			转矩 Torque			转动惯量 Moment of inertia(J)	重量 Approx WT
						Full Load 10kV	Full Load 11kV	Locked Rotor	Full Load	Locked Rotor	Pull Out		
	KW	(HP)	RPM	%	%	A	A	%FLC	Kg-m	%FLT	%FLC	Kg-m²	Kg
OST3-450F6-04P	800	1070	1485	94.6	87	56.1	51.0	700	525	70	180	29.7	3640
OST3-500F3-04P	900	1210	1485	94.7	88	62.4	56.7	700	591	70	180	51.7	4390
OST3-500F4-04P	1000	1340	1485	94.8	88	69.2	62.9	700	656	70	180	55.0	4550
OST3-500F5-04P	1120	1500	1485	94.9	88	77.4	70.4	700	735	70	180	60.2	4780
OST3-500F6-04P	1250	1680	1485	95.0	89	85.4	77.6	700	820	70	180	64.8	5020
OST3-500F7-04P	1400	1880	1485	95.3	89	95.3	86.6	700	919	70	180	69.4	5260
OST3-560F4-04P	1600	2140	1485	95.4	89	108.8	98.9	700	1050	70	180	98.0	6210
OST3-560F5-04P	1800	2410	1492	95.5	89	122.3	111.2	700	1176	70	180	103.0	6420
OST3-560F6-04P	2000	2680	1493	95.7	89	135.6	123.3	700	1305	70	180	108.0	6630
OST3-630F3-04P	2240	3000	1493	95.8	89	151.7	137.9	700	1462	60	180	149.0	8320
OST3-630F5-04P	2500	3350	1493	95.8	89	169.3	153.9	700	1632	60	180	156.0	8570
OST3-630F7-04P	2800	3750	1493	95.8	89	189.6	172.4	700	1828	60	180	164.0	8820
OST3-630F9-04P	3150	4220	1493	95.9	89	213.1	193.7	700	2056	60	180	172.0	9070
OST3-400F4-06P	220	295	990	91.4	80	17.4	15.8	600	217	70	180	21.6	2460
OST3-400F5-06P	250	335	990	91.6	80	19.7	17.9	600	246	70	180	23.5	2550
OST3-400F6-06P	280	375	990	91.8	80	22.0	20.0	600	276	70	180	25.4	2650
OST3-400F7-06P	315	420	990	92.1	82	24.1	21.9	600	310	70	180	27.3	2770
OST3-450F2-06P	355	475	990	92.4	83	26.7	24.3	600	349	70	180	27.6	2940
OST3-450F3-06P	400	535	990	92.6	83	30.0	27.3	600	394	70	180	29.4	3040
OST3-450F4-06P	450	605	990	92.8	83	33.7	30.7	600	443	70	180	32.2	3200
OST3-450F5-06P	500	670	995	93.2	83	37.3	33.9	600	490	70	180	35.5	3390
OST3-450F6-06P	560	750	995	93.5	84	41.2	37.4	600	548	70	180	38.8	3580
OST3-500F3-06P	630	845	995	94.0	84	46.1	41.9	600	617	70	180	52.9	4010
OST3-500F4-06P	710	950	995	94.2	84	51.8	47.1	600	695	70	180	56.8	4160
OST3-500F5-06P	800	1070	995	94.4	84	58.2	53.0	600	784	70	180	60.6	4310
OST3-500F6-06P	900	1210	990	94.6	85	64.6	58.7	600	886	70	180	66.0	4540
OST3-500F7-06P	1000	1340	990	94.8	85	71.7	65.1	600	984	70	180	72.1	4760
OST3-560F3-06P	1120	1500	990	94.9	85	80.2	72.9	600	1102	70	180	105.0	5370
OST3-560F4-06P	1250	1680	990	95.3	86	88.1	80.1	600	1230	70	180	115.0	5550
OST3-560F5-06P	1400	1880	995	95.4	86	98.5	89.6	600	1371	70	180	128.0	5920
OST3-560F6-06P	1600	2140	995	95.5	86	112.5	102.3	600	1567	70	180	135.0	6100
OST3-630F4-06P	1800	2410	995	95.6	86	126.4	114.9	600	1763	60	180	169.0	8070
OST3-630F5-06P	2000	2680	995	95.6	86	140.5	127.7	600	1959	60	180	178.0	8320
OST3-630F6-06P	2240	3000	995	95.6	86	157.3	143.0	600	2194	60	180	191.0	8630
OST3-630F7-06P	2500	3350	995	95.6	86	175.6	159.6	600	2448	60	180	206.0	9070

OST3系列(IP23) 高压(10kV、11kV)三相异步电动机(IC01)

OST3 SERIES (IP23) HIGH VOLTAGE(10kV、11kV) THREE-PHASE INDUCTION MOTORS (IC01)

电机型号 Motor Type	功率 Rated Power		额定转速 Rated Speed	效率 Efficiency	功率因数 Power Factor	电流 Current			转矩 Torque			转动惯量 Moment of inertia(J)	重量 Approx WT
						Full Load 10kV	Full Load 11kV	Locked Rotor	Full Load	Locked Rotor	Pull Out		
	KW	(HP)	RPM	%	%	A	A	%FLC	Kg-m	%FLT	%FLC	Kg-m²	Kg
OST3-450F2-08P	220	295	740	91.1	76	18.3	16.7	600	290	70	180	27.5	2940
OST3-450F3-08P	250	335	740	91.3	76	20.8	18.9	600	329	70	180	29.3	3040
OST3-450F4-08P	280	375	740	91.6	76	23.2	21.1	600	369	70	180	32.2	3200
OST3-450F5-08P	315	420	740	91.9	77	25.7	23.4	600	415	70	180	35.5	3390
OST3-450F6-08P	355	475	740	92.1	77	28.9	26.3	600	467	70	180	38.8	3580
OST3-500F2-08P	400	535	740	92.4	78	32.0	29.1	600	527	70	180	55.7	3800
OST3-500F3-08P	450	605	740	92.5	78	36.0	32.7	600	593	70	180	62.4	4000
OST3-500F4-08P	500	670	740	92.7	79	39.4	35.8	600	658	70	180	68.2	4200
OST3-500F5-08P	560	750	740	93.1	79	44.0	40.0	600	737	70	180	75.0	4440
OST3-500F6-08P	630	845	740	93.8	82	47.3	43.0	600	830	70	180	81.8	4690
OST3-500F7-08P	710	950	740	94.0	82	53.2	48.3	600	935	70	180	89.4	4930
OST3-560F3-08P	800	1070	740	94.2	82	59.8	54.4	600	1054	70	180	155.0	6050
OST3-560F4-08P	900	1210	740	94.3	82	67.2	61.1	600	1185	70	180	162.0	6250
OST3-560F5-08P	1000	1340	744	94.5	83	73.6	66.9	600	1310	70	180	171.0	6450
OST3-560F6-08P	1120	1500	744	94.7	83	82.3	74.8	600	1467	70	180	179.0	6660
OST3-630F6-08P	1250	1680	745	94.8	83	91.7	83.4	600	1635	70	180	229.0	7900
OST3-630F7-08P	1400	1880	745	94.9	83	102.6	93.3	600	1831	70	180	240.0	8110
OST3-630F8-08P	1600	2140	745	94.9	83	117.3	106.6	600	2093	70	180	252.0	8320
OST3-630F9-08P	1800	2410	745	94.9	83	131.9	119.9	600	2354	70	180	263.0	8530
OST3-450F5-10P	220	295	595	91.0	72	19.4	17.6	550	360	70	180	38.2	3260
OST3-450F6-10P	250	335	595	91.2	73	21.7	19.7	550	409	70	180	41.0	3390
OST3-500F2-10P	280	375	595	91.6	74	23.8	21.7	550	459	70	180	54.6	4010
OST3-500F3-10P	315	420	595	91.9	74	26.7	24.3	550	516	70	180	59.7	4220
OST3-500F4-10P	355	475	595	92.1	75	29.7	27.0	550	581	70	180	65.6	4460
OST3-500F5-10P	400	535	595	92.3	75	33.4	30.3	550	655	70	180	71.5	4700
OST3-500F6-10P	450	605	590	92.5	77	36.5	33.2	600	743	70	180	78.2	4950
OST3-500F7-10P	500	670	590	92.7	77	40.4	36.8	600	826	70	180	84.9	5190
OST3-560F2-10P	560	750	590	92.9	78	44.6	40.6	600	925	70	180	131.0	5410
OST3-560F3-10P	630	845	590	93.1	78	50.1	45.5	600	1041	70	180	139.0	5610
OST3-560F4-10P	710	950	590	93.3	78	56.3	51.2	600	1173	70	180	155.0	6010
OST3-560F5-10P	800	1070	594	93.8	80	61.6	56.0	600	1312	70	180	163.0	6200
OST3-560F6-10P	900	1210	593	94.0	80	69.1	62.8	600	1479	70	180	171.0	6400
OST3-630F5-10P	1000	1340	593	94.1	80	76.7	69.7	600	1643	70	180	207.0	7260
OST3-630F6-10P	1120	1500	593	94.2	80	85.8	78.0	600	1841	70	180	225.0	7580
OST3-630F7-10P	1250	1680	593	94.3	80	95.7	87.0	600	2054	70	180	244.0	7900

OST3系列(IP23) 高压(10kV、11kV)三相异步电动机(IC01)

OST3 SERIES (IP23) HIGH VOLTAGE(10kV、11kV) THREE-PHASE INDUCTION MOTORS (IC01)

电机型号 Motor Type	功率 Rated Power		额定转速 Rated Speed	效率 Efficiency	功率因数 Power Factor	电流 Current			转矩 Torque			转动惯量 Moment of inertia(J)	重量 Approx WT
						Full Load 10kV	Full Load 11kV	Locked Rotor	Full Load	Locked Rotor	Pull Out		
	KW	(HP)	RPM	%	%	A	A	%FLC	Kg-m	%FLT	%FLC	Kg-m²	Kg
OST3-630F8-10P	1400	1880	593	94.3	80	107.1	97.4	600	2301	70	180	264.0	8210
OST3-630F9-10P	1600	2140	593	94.3	80	122.5	111.3	600	2629	70	180	281.0	8530
OST3-500F3-12P	220	295	490	90.9	72	19.4	17.6	550	438	70	180	58.3	4410
OST3-500F4-12P	250	335	490	91.1	72	22.0	20.0	550	497	70	180	61.1	4570
OST3-500F5-12P	280	375	490	91.3	72	24.6	22.4	550	557	70	180	63.8	4740
OST3-500F6-12P	315	420	490	91.6	73	27.2	24.7	550	626	70	180	66.6	4900
OST3-500F7-12P	355	475	490	91.8	73	30.6	27.8	550	706	70	180	69.3	5060
OST3-560F2-12P	400	535	490	92.0	73	34.4	31.3	600	796	70	180	143.0	5610
OST3-560F3-12P	450	605	490	92.2	73	38.6	35.1	600	895	70	180	151.0	5810
OST3-560F4-12P	500	670	490	92.5	73	42.8	38.9	600	994	70	180	159.0	6010
OST3-560F5-12P	560	750	492	92.9	74	47.0	42.8	600	1109	70	180	167.0	6200
OST3-560F6-12P	630	845	493	93.1	74	52.8	48.0	600	1245	70	180	175.0	6400
OST3-630F5-12P	710	950	493	93.3	74	59.4	54.0	600	1403	70	180	202.0	7050
OST3-630F6-12P	800	1070	492	93.8	74	66.5	60.5	600	1585	70	180	222.0	7370
OST3-630F7-12P	900	1210	492	93.8	74	74.9	68.1	600	1783	70	180	239.0	7680
OST3-630F8-12P	1000	1340	492	93.8	74	83.2	75.6	600	1981	70	180	256.0	8000
OST3-630F9-12P	1120	1500	492	93.8	74	93.2	84.7	600	2218	70	180	276.0	8320

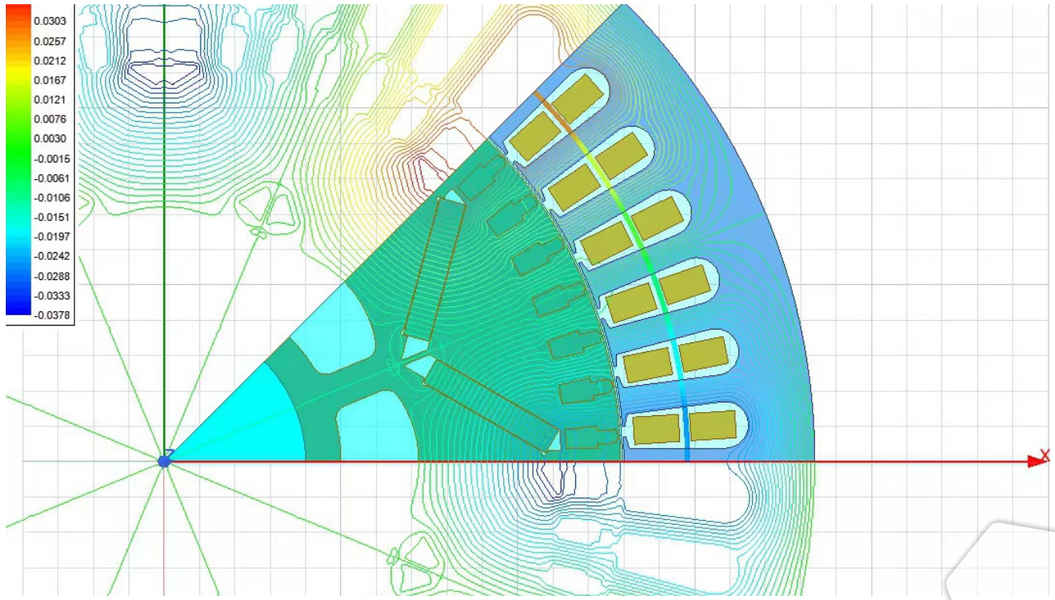

OST4系列(IP23)高压(6kV、6.6kV)三相异步电动机(IC01)

OST4 SERIES (IP23) HIGH VOLTAGE (6kV、6.6kV) THREE-PHASE INDUCTION MOTORS (IC01)

电机型号 Motor Type	功率 Rated Power		额定转速 Rated Speed	效率 Efficiency	功率因数 Power Factor	电流 Current			转矩 Torque			转动惯量 Moment of inertia(J)	重量 Approx WT
						Full Load 6kV	Full Load 6.6kV	Locked Rotor	Full Load	Locked Rotor	Pull Out		
	KW	(HP)	RPM	%	%	A	A	%FLC	Kg-m	%FLT	%FLC	Kg-m²	Kg
OST4-355F1-02P	220	295	2975	93.3	86	26.4	24.0	700	72	60	180	3.5	2010
OST4-355F2-02P	250	335	2975	93.4	86	29.9	27.2	700	82	60	180	3.5	2010
OST4-355F3-02P	280	375	2975	93.6	86	33.5	30.4	700	92	60	180	3.8	2090
OST4-355F4-02P	315	420	2975	93.9	86	37.5	34.1	700	103	60	180	4.2	2150
OST4-355F5-02P	355	475	2975	94.1	86	42.2	38.4	700	116	60	180	4.4	2240
OST4-355F6-02P	400	535	2975	94.5	86	47.4	43.1	700	131	60	180	4.7	2300
OST4-400F1-02P	450	605	2980	94.7	86	53.2	48.3	700	147	60	180	8.1	2580
OST4-400F2-02P	500	670	2980	95.0	87	58.2	52.9	700	164	60	180	8.7	2670
OST4-400F3-02P	560	750	2980	95.1	87	65.1	59.2	700	183	60	180	8.7	2670
OST4-400F4-02P	630	845	2980	95.2	87	73.2	66.5	700	206	60	180	9.5	2790
OST4-400F5-02P	710	950	2980	95.3	87	82.4	74.9	700	232	60	180	9.5	2790
OST4-450F1-02P	800	1070	2980	95.6	87	92.6	84.1	700	262	60	180	10.5	3130
OST4-450F2-02P	900	1210	2980	95.7	87	104.0	94.6	700	294	60	180	10.5	3130
OST4-450F3-02P	1000	1340	2980	95.8	88	114.1	103.8	700	327	60	180	11.6	3320
OST4-450F4-02P	1120	1500	2980	95.9	88	127.7	116.1	700	366	60	180	12.9	3510
OST4-500F2-02P	1250	1680	2980	96.1	88	142.2	129.3	700	409	60	180	19.0	4210
OST4-500F3-02P	1400	1880	2980	96.2	88	159.1	144.7	700	458	60	180	20.5	4380
OST4-500F4-02P	1600	2140	2980	96.3	88	181.7	165.2	700	523	60	180	22.4	4600
OST4-500F5-02P	1800	2410	2980	96.3	88	204.4	185.8	700	589	60	180	24.6	4900
OST4-560F1-02P	2000	2680	2980	96.5	88	226.6	206.0	700	654	60	180	39.0	6100
OST4-560F3-02P	2240	3000	2980	96.6	88	253.6	230.5	700	733	60	180	41.2	6300
OST4-560F5-02P	2500	3350	2982	96.6	89	279.8	254.4	700	817	60	180	43.4	6520
OST4-630F1-02P	2800	3750	2982	96.7	89	313.1	284.6	700	915	60	180	71.8	8470
OST4-630F3-02P	3150	4220	2982	96.8	89	351.8	319.9	700	1029	60	180	77.0	8820
OST4-630F5-02P	3550	4760	2982	96.8	89	396.5	360.5	700	1160	60	180	83.2	9300
OST4-355F1-04P	220	295	1485	93.7	85	26.6	24.2	650	144	80	180	6.6	1980
OST4-355F2-04P	250	335	1485	93.8	85	30.2	27.4	650	164	80	180	6.6	1980
OST4-355F3-04P	280	375	1485	93.9	86	33.4	30.3	650	184	80	180	7.1	2060
OST4-355F4-04P	315	420	1485	94.1	86	37.5	34.1	650	207	80	180	7.6	2140
OST4-355F5-04P	355	475	1485	94.3	86	42.1	38.3	650	233	80	180	8.2	2230
OST4-355F6-04P	400	535	1485	94.4	86	47.4	43.1	650	262	80	180	8.7	2310
OST4-400F1-04P	450	605	1485	94.6	86	53.2	48.4	650	295	80	180	17.8	2610
OST4-400F2-04P	500	670	1485	94.8	87	58.3	53.0	650	328	80	180	19.1	2700
OST4-400F3-04P	560	750	1485	95.0	87	65.2	59.3	650	367	80	180	20.6	2800
OST4-400F4-04P	630	840	1485	95.2	87	73.2	66.5	650	413	70	180	21.9	2940

OST4系列(IP23)高压(6kV、6.6kV)三相异步电动机(IC01)

OST4 SERIES (IP23) HIGH VOLTAGE (6kV、6.6kV) THREE-PHASE INDUCTION MOTORS (IC01)

电机型号 Motor Type	功率 Rated Power		额定转速 Rated Speed	效率 Efficiency	功率因数 Power Factor	电流 Current			转矩 Torque			转动惯量 Moment of inertia(J)	重量 Approx WT
						Full Load 6kV	Full Load 6.6kV	Locked Rotor	Full Load	Locked Rotor	Pull Out		
	KW	(HP)	RPM	%	%	A	A	%FLC	Kg-m	%FLT	%FLC	Kg-m²	Kg
OST4-400F5-04P	710	950	1485	95.4	87	82.3	74.8	650	466	70	180	23.7	3060
OST4-450F1-04P	800	1070	1485	95.5	87	92.7	84.2	650	525	80	180	23.9	3210
OST4-450F2-04P	900	1210	1485	95.6	87	104.1	94.7	650	591	80	180	26.3	3410
OST4-450F3-04P	1000	1340	1485	95.7	87	115.6	105.1	650	656	80	180	28.5	3570
OST4-450F4-04P	1120	1500	1485	95.8	88	127.8	116.2	650	735	80	180	30.9	3770
OST4-500F2-04P	1250	1680	1485	96.0	88	142.4	129.4	650	820	70	180	62.6	4950
OST4-500F3-04P	1400	1880	1485	96.0	88	159.5	145.0	650	919	70	180	67.4	5200
OST4-500F4-04P	1600	2140	1485	96.1	89	180.0	163.6	650	1050	60	180	72.2	5440
OST4-500F5-04P	1800	2410	1485	96.2	89	202.3	183.9	650	1181	60	180	76.2	5610
OST4-560F1-04P	2000	2680	1485	96.4	89	224.3	203.9	650	1312	60	180	102	6430
OST4-560F3-04P	2240	3000	1485	96.5	89	251.0	228.2	650	1470	60	180	107	6640
OST4-560F5-04P	2500	3350	1485	96.6	89	279.8	254.4	650	1641	60	180	112	6860
OST4-630F1-04P	2800	3750	1493	96.8	89	312.7	284.3	650	1828	60	180	162	8870
OST4-630F3-04P	3150	4220	1493	96.8	89	351.8	319.9	650	2056	60	180	171	9130
OST4-630F5-04P	3550	4760	1493	96.8	89	396.5	360.5	650	2317	60	180	179	9390
OST4-355F2-06P	185	250	985	93.3	82	23.3	21.2	600	183	80	180	9.4	2050
OST4-355F3-06P	200	270	985	93.4	82	25.1	22.8	600	198	80	180	9.4	2050
OST4-355F4-06P	220	295	985	93.5	82	27.6	25.1	600	218	80	180	10.3	2130
OST4-355F5-06P	250	335	985	93.7	82	31.3	28.5	600	247	80	180	11.2	2210
OST4-355F6-06P	280	375	985	93.9	83	34.6	31.4	600	277	80	180	12.2	2300
OST4-400F1-06P	315	420	985	94.2	83	38.8	35.2	600	312	80	180	22.5	2590
OST4-400F2-06P	355	475	985	94.4	83	43.6	39.6	600	351	80	180	22.5	2590
OST4-400F3-06P	400	535	985	94.4	83	49.1	44.7	600	396	80	180	24.4	2680
OST4-400F4-06P	450	605	990	94.7	84	54.4	49.5	600	443	80	180	26.9	2820
OST4-400F5-06P	500	670	990	95.0	85	59.6	54.2	600	492	80	180	30.4	2980
OST4-450F1-06P	560	750	990	95.1	85	66.7	60.6	600	551	80	180	33.5	3310
OST4-450F2-06P	630	845	990	95.2	85	74.9	68.1	600	620	80	180	36.6	3510
OST4-450F3-06P	710	950	990	95.4	85	84.3	76.6	600	699	70	180	40.4	3710
OST4-450F4-06P	800	1070	990	95.5	85	94.8	86.2	600	787	70	180	44.3	3900
OST4-500F2-06P	900	1210	990	95.6	85	106.6	96.9	600	886	70	180	59.1	4310
OST4-500F3-06P	1000	1340	990	95.7	85	118.3	107.5	600	984	70	180	63.0	4460
OST4-500F4-06P	1120	1500	991	95.8	86	130.8	118.9	650	1101	70	180	68.6	4700
OST4-500F5-06P	1250	1680	991	96.0	86	145.7	132.4	650	1229	70	180	75.0	4930
OST4-560F1-06P	1400	1880	991	96.0	86	163.2	148.3	650	1377	70	180	120	5740
OST4-560F3-06P	1600	2140	993	96.1	86	186.3	169.4	650	1570	70	180	126	5940

OST4系列(IP23)高压(6kV、6.6kV)三相异步电动机(IC01)

OST4 SERIES (IP23) HIGH VOLTAGE (6kV、6.6kV) THREE-PHASE INDUCTION MOTORS (IC01)

电机型号 Motor Type	功率 Rated Power		额定转速 Rated Speed	效率 Efficiency	功率因数 Power Factor	电流 Current			转矩 Torque			转动惯量 Moment of inertia(J)	重量 Approx WT
						Full Load 6kV	Full Load 6.6kV	Locked Rotor	Full Load	Locked Rotor	Pull Out		
	KW	(HP)	RPM	%	%	A	A	%FLC	Kg-m	%FLT	%FLC	Kg-m²	Kg
OST4-560F5-06P	1800	2410	994	96.2	86	209.4	190.3	650	1765	70	180	133	6130
OST4-630F2-06P	2000	2680	994	96.4	86	232.1	211.0	650	1961	70	180	166	7870
OST4-630F4-06P	2240	3000	994	96.4	86	260.0	236.4	650	2196	70	180	180	8230
OST4-630F6-06P	2500	3350	994	96.5	86	289.9	263.5	650	2451	70	180	194	8600
OST4-400F1-08P	220	295	740	93.4	78	29.1	26.4	550	290	80	180	22.5	2520
OST4-400F2-08P	250	335	740	93.5	79	32.6	29.6	550	329	80	180	24.4	2620
OST4-400F3-08P	280	375	740	93.7	79	36.4	33.1	550	369	80	180	26.4	2710
OST4-400F4-08P	315	420	740	93.9	80	40.4	36.7	550	415	80	180	28.4	2850
OST4-400F5-08P	355	475	740	94.0	80	45.4	41.3	550	467	80	180	30.3	2950
OST4-450F1-08P	400	535	740	94.2	80	51.1	46.4	550	527	80	180	33.5	3310
OST4-450F2-08P	450	605	740	94.3	81	56.7	51.5	550	593	80	180	36.9	3510
OST4-450F3-08P	500	670	740	94.8	81	62.7	57.0	550	658	80	180	40.4	3710
OST4-450F4-08P	560	750	740	94.9	82	69.2	63.0	550	737	80	180	44.3	3900
OST4-500F2-08P	630	845	740	95.0	82	77.8	70.7	550	830	80	180	70.9	4350
OST4-500F3-08P	710	950	740	95.0	82	87.7	79.7	550	935	80	180	78.0	4600
OST4-500F4-08P	800	1070	740	95.2	84	96.3	87.5	600	1054	70	180	85.1	4850
OST4-500F5-08P	900	1210	740	95.3	84	108.2	98.4	600	1185	70	180	93.0	5100
OST4-560F3-08P	1000	1340	740	95.4	84	120.1	109.2	600	1317	70	180	153	6050
OST4-560F4-08P	1120	1500	744	95.5	84	134.3	122.1	600	1467	70	180	161	6260
OST4-560F5-08P	1250	1680	744	95.6	84	149.8	136.2	600	1637	70	180	170	6470
OST4-630F3-08P	1400	1880	744	95.7	84	167.6	152.4	600	1834	70	180	226	7950
OST4-630F4-08P	1600	2140	744	95.8	84	191.3	173.9	600	2096	70	180	238	8180
OST4-630F5-08P	1800	2410	744	95.8	84	215.2	195.7	600	2358	70	180	250	8390
OST4-630F6-08P	2000	2680	744	96.0	84	238.7	217.0	600	2620	70	180	262	8610
OST4-400F3-10P	220	295	590	92.8	77	29.6	26.9	550	363	80	180	30.3	2740
OST4-400F4-10P	250	335	590	92.9	78	33.2	30.2	550	413	80	180	32.6	2840
OST4-400F5-10P	280	375	590	93.1	78	37.1	33.7	550	462	80	180	36.6	3030
OST4-450F1-10P	315	420	590	93.3	79	41.1	37.4	550	520	80	180	39.7	3370
OST4-450F2-10P	355	475	590	93.5	79	46.2	42.0	550	586	80	180	42.6	3510
OST4-450F3-10P	400	535	590	93.9	80	51.2	46.6	550	661	80	180	46.7	3710
OST4-450F4-10P	450	605	590	93.9	80	57.6	52.4	550	743	80	180	46.7	3710
OST4-500F1-10P	500	670	590	94.2	80	63.8	58.0	550	826	80	180	62.1	4370
OST4-500F2-10P	560	750	590	94.3	80	71.4	64.9	550	925	80	180	68.2	4620
OST4-500F3-10P	630	845	590	94.4	80	80.3	73.0	550	1041	80	180	74.4	4860
OST4-500F4-10P	710	950	590	94.5	82	88.2	80.2	600	1173	70	180	81.3	5120

OST4系列(IP23)高压(6kV、6.6kV)三相异步电动机(IC01)

OST4 SERIES (IP23) HIGH VOLTAGE (6kV、6.6kV) THREE-PHASE INDUCTION MOTORS (IC01)

电机型号 Motor Type	功率 Rated Power		额定转速 Rated Speed	效率 Efficiency	功率因数 Power Factor	电流 Current			转矩 Torque			转动惯量 Moment of inertia(J)	重量 Approx WT
						Full Load 6kV	Full Load 6.6kV	Locked Rotor	Full Load	Locked Rotor	Pull Out		
	KW	(HP)	RPM	%	%	A	A	%FLC	Kg-m	%FLT	%FLC	Kg-m²	Kg
OST4-500F5-10P	800	1070	590	94.8	82	99.0	90.0	600	1321	70	180	88.3	5370
OST4-560F3-10P	900	1210	590	94.9	82	111.3	101.2	600	1487	70	180	161	6000
OST4-560F4-10P	1000	1340	594	95.0	82	123.5	112.3	600	1641	70	180	170	6260
OST4-560F5-10P	1120	1500	594	95.1	82	138.2	125.6	600	1837	70	180	178	6460
OST4-630F3-10P	1250	1680	594	95.4	82	153.8	139.8	600	2051	70	180	233	7790
OST4-630F4-10P	1400	1880	594	95.5	82	172.0	156.4	600	2297	70	180	254	8180
OST4-630F5-10P	1600	2140	594	95.5	82	196.6	178.7	600	2625	70	180	275	8390
OST4-630F6-10P	1800	2410	594	95.6	82	221.0	200.9	600	2953	70	180	292	8610
OST4-450F1-12P	220	295	490	92.2	73	31.5	28.6	550	438	80	180	37.8	3310
OST4-450F2-12P	250	335	490	92.4	73	35.7	32.4	550	497	80	180	40.6	3440
OST4-450F3-12P	280	375	490	93.3	74	39.0	35.5	550	557	80	180	44.5	3630
OST4-450F4-12P	315	420	490	93.5	75	43.2	39.3	550	626	80	180	49.1	3870
OST4-500F1-12P	355	475	490	93.6	75	48.7	44.2	550	706	80	180	60.6	4620
OST4-500F2-12P	400	535	490	93.9	75	54.7	49.7	550	796	80	180	63.5	4780
OST4-500F3-12P	450	605	490	93.9	75	61.5	55.9	550	895	80	180	66.4	4960
OST4-500F4-12P	500	670	490	94.3	79	64.6	58.7	600	994	70	180	69.3	5120
OST4-500F5-12P	560	750	490	94.4	79	72.3	65.7	600	1114	70	180	72.1	5290
OST4-560F3-12P	630	845	490	94.5	79	81.2	73.8	600	1253	70	180	165	6000
OST4-560F4-12P	710	950	494	94.5	79	91.5	83.2	600	1401	70	180	174	6190
OST4-560F5-12P	800	1070	494	94.8	79	102.8	93.4	600	1578	70	180	182	6390
OST4-630F3-12P	900	1210	494	94.9	79	115.5	105.0	600	1775	70	180	231	7630
OST4-630F4-12P	1000	1340	494	95.0	79	128.2	116.6	600	1973	70	180	249	7950
OST4-630F5-12P	1120	1500	494	95.0	79	143.6	130.5	600	2209	70	180	266	8280
OST4-630F6-12P	1250	1680	494	95.2	79	159.9	145.4	600	2466	70	180	287	8610

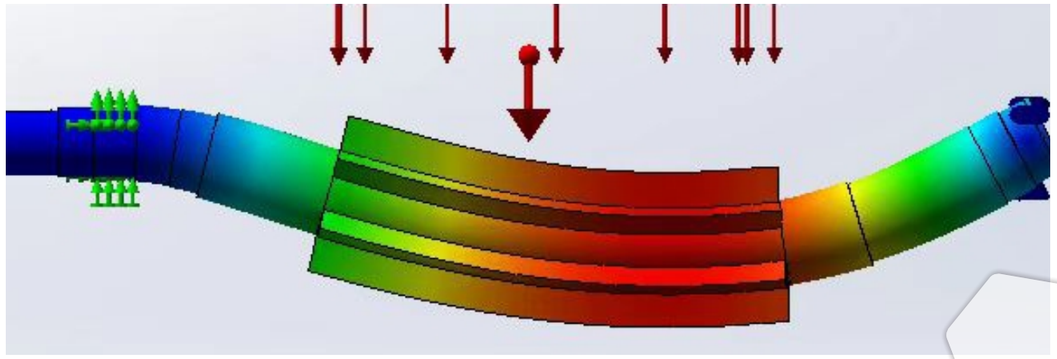

OST4系列(IP23) 高压(10kV、11kV)三相异步电动机(IC01)

OST4 SERIES (IP23) HIGH VOLTAGE(10kV、11kV) THREE-PHASE INDUCTION MOTORS (IC01)

电机型号 Motor Type	功率 Rated Power		额定转速 Rated Speed	效率 Efficiency	功率因数 Power Factor	电流 Current			转矩 Torque			转动惯量 Moment of inertia(J)	重量 Approx WT
						Full Load 10kV	Full Load 11kV	Locked Rotor	Full Load	Locked Rotor	Pull Out		
	KW	(HP)	RPM	%	%	A	A	%FLC	Kg-m	%FLT	%FLC	Kg-m²	Kg
OST4-400F1-02P	220	295	2980	93.3	86	15.8	14.4	750	72	60	180	7.5	2400
OST4-400F2-02P	250	335	2980	93.4	86	18.0	16.3	750	82	60	180	7.5	2420
OST4-400F3-02P	280	375	2980	93.6	86	20.1	18.3	750	92	60	180	7.5	2440
OST4-400F4-02P	315	420	2980	93.9	86	22.5	20.5	750	103	60	180	8.1	2500
OST4-400F5-02P	355	475	2980	94.3	87	25.0	22.7	700	116	60	180	8.1	2550
OST4-400F6-02P	400	535	2980	94.5	87	28.1	25.5	700	131	60	180	8.7	2640
OST4-400F7-02P	450	605	2980	94.7	87	31.5	28.7	700	147	60	180	8.7	2720
OST4-450F2-02P	500	670	2980	94.9	87	35.0	31.8	700	164	60	180	9.6	2920
OST4-450F3-02P	560	750	2980	95.0	87	39.1	35.6	700	183	60	180	9.6	2940
OST4-450F4-02P	630	845	2980	95.0	87	44.0	40.0	700	206	60	180	10.5	3110
OST4-450F5-02P	710	950	2980	95.1	88	49.0	44.5	700	232	60	180	10.5	3190
OST4-450F6-02P	800	1070	2980	95.3	88	55.1	50.1	700	262	60	180	11.6	3300
OST4-500F3-02P	900	1210	2980	95.4	88	61.9	56.3	700	294	60	180	17.7	4020
OST4-500F4-02P	1000	1340	2980	95.5	88	68.7	62.5	700	327	60	180	19.0	4190
OST4-500F5-02P	1120	1500	2980	95.6	88	76.9	69.9	700	366	60	180	20.5	4360
OST4-500F6-02P	1250	1680	2980	95.9	89	84.6	76.9	700	409	60	180	22.5	4620
OST4-500F7-02P	1400	1880	2980	96.0	89	94.6	86.0	700	458	60	180	24.6	4870
OST4-560F4-02P	1600	2140	2980	96.0	89	108.1	98.3	700	523	60	180	36.8	5830
OST4-560F5-02P	1800	2410	2982	96.1	90	120.2	109.2	700	588	60	180	39.0	6040
OST4-560F6-02P	2000	2680	2982	96.3	90	133.2	121.1	700	654	60	180	41.2	6250
OST4-630F3-02P	2240	3000	2982	96.5	90	148.9	135.4	700	732	60	180	71.8	8470
OST4-630F5-02P	2500	3350	2982	96.5	90	166.2	151.1	700	817	60	180	75.9	8750
OST4-630F7-02P	2800	3750	2982	96.5	90	186.1	169.2	700	915	60	180	79.0	9030
OST4-630F9-02P	3150	4220	2982	96.6	90	209.2	190.2	700	1029	60	180	83.2	9300
OST4-400F0-04P	185	250	1480	93.1	83	13.8	12.6	700	122	70	180	14.9	2320
OST4-400F0-04P	200	270	1480	93.2	83	14.9	13.6	700	132	70	180	14.9	2340
OST4-400F1-04P	220	295	1480	93.3	85	16.0	14.6	700	145	70	180	16.3	2470
OST4-400F2-04P	250	335	1480	93.4	85	18.2	16.5	700	165	70	180	16.3	2550
OST4-400F3-04P	280	375	1480	93.5	85	20.3	18.5	700	184	70	180	16.3	2570
OST4-400F4-04P	315	420	1480	93.8	85	22.8	20.7	700	207	70	180	17.8	2610
OST4-400F5-04P	355	475	1485	93.9	86	25.4	23.1	700	233	70	180	19.1	2700
OST4-400F6-04P	400	535	1485	94.0	86	28.6	26.0	700	262	70	180	20.6	2800
OST4-400F7-04P	450	605	1485	94.4	86	32.0	29.1	700	295	70	180	22.6	2940
OST4-450F2-04P	500	670	1485	94.5	86	35.5	32.3	700	328	70	180	22.2	3120
OST4-450F3-04P	560	750	1485	94.7	86	39.7	36.1	700	367	70	180	23.9	3210

OST4系列(IP23) 高压(10kV、11kV)三相异步电动机(IC01)

OST4 SERIES (IP23) HIGH VOLTAGE(10kV、11kV) THREE-PHASE INDUCTION MOTORS (IC01)

电机型号 Motor Type	功率 Rated Power		额定转速 Rated Speed	效率 Efficiency	功率因数 Power Factor	电流 Current			转矩 Torque			转动惯量 Moment of inertia(J)	重量 Approx WT
						Full Load 10kV	Full Load 11kV	Locked Rotor	Full Load	Locked Rotor	Pull Out		
	KW	(HP)	RPM	%	%	A	A	%FLC	Kg-m	%FLT	%FLC	Kg-m²	Kg
OST4-450F4-04P	630	845	1485	94.9	86	44.6	40.5	700	413	70	180	26.3	3410
OST4-450F5-04P	710	950	1485	95.4	87	49.4	44.9	700	466	70	180	28.5	3570
OST4-450F6-04P	800	1070	1485	95.5	87	55.6	50.5	700	525	70	180	30.9	3770
OST4-500F3-04P	900	1210	1485	95.6	88	61.8	56.2	700	591	70	180	53.8	4540
OST4-500F4-04P	1000	1340	1485	95.7	88	68.6	62.3	700	656	70	180	57.2	4710
OST4-500F5-04P	1120	1500	1485	95.8	88	76.7	69.7	700	735	70	180	62.6	4950
OST4-500F6-04P	1250	1680	1485	96.0	89	84.5	76.8	700	820	70	180	67.4	5200
OST4-500F7-04P	1400	1880	1485	96.1	89	94.5	85.9	700	919	70	180	72.2	5440
OST4-560F4-04P	1600	2140	1485	96.2	89	107.9	98.1	700	1050	70	180	102	6430
OST4-560F5-04P	1800	2410	1492	96.3	89	121.3	110.2	700	1176	70	180	107	6640
OST4-560F6-04P	2000	2680	1493	96.5	89	134.5	122.2	700	1305	70	180	112	6860
OST4-630F3-04P	2240	3000	1493	96.6	89	150.4	136.8	700	1462	60	180	155	8610
OST4-630F5-04P	2500	3350	1493	96.6	89	167.9	152.6	700	1632	60	180	162	8870
OST4-630F7-04P	2800	3750	1493	96.6	89	188.0	170.9	700	1828	60	180	171	9130
OST4-630F9-04P	3150	4220	1493	96.7	89	211.3	192.1	700	2056	60	180	179	9390
OST4-400F4-06P	220	295	990	92.9	80	17.1	15.5	600	217	70	180	22.5	2550
OST4-400F5-06P	250	335	990	93.0	80	19.4	17.6	600	246	70	180	24.4	2640
OST4-400F6-06P	280	375	990	93.2	80	21.7	19.7	600	276	70	180	26.4	2740
OST4-400F7-06P	315	420	990	93.5	82	23.7	21.6	600	310	70	180	28.4	2870
OST4-450F2-06P	355	475	990	93.7	83	26.4	24.0	600	349	70	180	28.7	3040
OST4-450F3-06P	400	535	990	93.9	83	29.6	26.9	600	394	70	180	30.6	3150
OST4-450F4-06P	450	605	990	94.0	83	33.3	30.3	600	443	70	180	33.5	3310
OST4-450F5-06P	500	670	995	94.5	83	36.8	33.5	600	490	70	180	36.9	3510
OST4-450F6-06P	560	750	995	94.6	84	40.7	37.0	600	548	70	180	40.4	3710
OST4-500F3-06P	630	845	995	94.9	84	45.6	41.5	600	617	70	180	55.0	4150
OST4-500F4-06P	710	950	995	95.0	84	51.4	46.7	600	695	70	180	59.1	4310
OST4-500F5-06P	800	1070	995	95.2	84	57.8	52.5	600	784	70	180	63.0	4460
OST4-500F6-06P	900	1210	990	95.4	85	64.1	58.3	600	886	70	180	68.6	4700
OST4-500F7-06P	1000	1340	990	95.5	85	71.1	64.7	600	984	70	180	75.0	4930
OST4-560F3-06P	1120	1500	990	95.7	85	79.5	72.3	600	1102	70	180	109	5560
OST4-560F4-06P	1250	1680	990	95.9	86	87.5	79.6	600	1230	70	180	120	5740
OST4-560F5-06P	1400	1880	995	96.1	86	97.8	88.9	600	1371	70	180	133	6130
OST4-560F6-06P	1600	2140	995	96.2	86	111.7	101.5	600	1567	70	180	140	6310
OST4-630F4-06P	1800	2410	995	96.2	86	125.6	114.2	600	1763	60	180	176	8350
OST4-630F5-06P	2000	2680	995	96.3	86	139.4	126.8	600	1959	60	180	185	8610

OST4系列(IP23) 高压(10kV、11kV)三相异步电动机(IC01)

OST4 SERIES (IP23) HIGH VOLTAGE(10kV、11kV) THREE-PHASE INDUCTION MOTORS (IC01)

电机型号 Motor Type	功率 Rated Power		额定转速 Rated Speed	效率 Efficiency	功率因数 Power Factor	电流 Current			转矩 Torque			转动惯量 Moment of inertia(J)	重量 Approx WT
						Full Load 10kV	Full Load 11kV	Locked Rotor	Full Load	Locked Rotor	Pull Out		
	KW	(HP)	RPM	%	%	A	A	%FLC	Kg-m	%FLT	%FLC	Kg-m²	Kg
OST4-630F6-06P	2240	3000	995	96.3	86	156.2	142.0	600	2194	60	180	199	8930
OST4-630F7-06P	2500	3350	995	96.3	86	174.3	158.4	600	2448	60	180	214	9390
OST4-450F2-08P	220	295	740	92.6	76	18.0	16.4	600	290	70	180	28.6	3040
OST4-450F3-08P	250	335	740	92.8	76	20.5	18.6	600	329	70	180	30.5	3150
OST4-450F4-08P	280	375	740	93.0	76	22.9	20.8	600	369	70	180	33.5	3310
OST4-450F5-08P	315	420	740	93.5	77	25.3	23.0	600	415	70	180	36.9	3510
OST4-450F6-08P	355	475	740	93.7	77	28.4	25.8	600	467	70	180	40.4	3710
OST4-500F2-08P	400	535	740	93.8	78	31.6	28.7	600	527	70	180	57.9	3930
OST4-500F3-08P	450	605	740	93.9	78	35.5	32.2	600	593	70	180	64.9	4140
OST4-500F4-08P	500	670	740	94.4	79	38.7	35.2	600	658	70	180	70.9	4350
OST4-500F5-08P	560	750	740	94.5	79	43.3	39.4	600	737	70	180	78.0	4600
OST4-500F6-08P	630	845	740	94.9	82	46.7	42.5	600	830	70	180	85.1	4850
OST4-500F7-08P	710	950	740	95.0	82	52.6	47.8	600	935	70	180	93.0	5100
OST4-560F3-08P	800	1070	740	95.2	82	59.2	53.8	600	1054	70	180	161	6260
OST4-560F4-08P	900	1210	740	95.3	82	66.5	60.4	600	1185	70	180	168	6470
OST4-560F5-08P	1000	1340	744	95.5	83	72.8	66.2	600	1310	70	180	178	6680
OST4-560F6-08P	1120	1500	744	95.6	83	81.5	74.1	600	1467	70	180	186	6890
OST4-630F6-08P	1250	1680	745	95.8	83	90.8	82.5	600	1635	70	180	238	8180
OST4-630F7-08P	1400	1880	745	95.8	83	101.7	92.4	600	1831	70	180	250	8390
OST4-630F8-08P	1600	2140	745	95.8	83	116.2	105.6	600	2093	70	180	262	8610
OST4-630F9-08P	1800	2410	745	95.8	83	130.7	118.8	600	2354	70	180	274	8830
OST4-450F5-10P	220	295	595	92.5	92.5	19.1	17.3	550	360	70	180	39.7	3370
OST4-450F6-10P	250	335	595	92.7	92.7	21.3	19.4	550	409	70	180	42.6	3510
OST4-500F2-10P	280	375	595	93.1	93.1	23.5	21.3	550	459	70	180	56.8	4150
OST4-500F3-10P	315	420	595	93.4	93.4	26.3	23.9	550	516	70	180	62.1	4370
OST4-500F4-10P	355	475	595	93.5	93.5	29.2	26.6	550	581	70	180	68.2	4620
OST4-500F5-10P	400	535	595	93.6	93.6	32.9	29.9	550	655	70	180	74.4	4860
OST4-500F6-10P	450	605	590	93.8	93.8	36.0	32.7	600	743	70	180	81.3	5120
OST4-500F7-10P	500	670	590	94.0	94.0	39.9	36.3	600	826	70	180	88.3	5370
OST4-560F2-10P	560	750	590	94.1	94.1	44.1	40.0	600	925	70	180	136	5600
OST4-560F3-10P	630	845	590	94.3	94.3	49.5	45.0	600	1041	70	180	145	5810
OST4-560F4-10P	710	950	590	94.5	94.5	55.6	50.6	600	1173	70	180	161	6220
OST4-560F5-10P	800	1070	594	94.9	94.9	60.8	55.3	600	1312	70	180	170	6420
OST4-560F6-10P	900	1210	593	95.1	95.1	68.3	62.1	600	1479	70	180	178	6620
OST4-630F5-10P	1000	1340	593	95.1	95.1	75.9	69.0	600	1643	70	180	215	7510

OST4系列(IP23) 高压(10kV、11kV)三相异步电动机(IC01)

OST4 SERIES (IP23) HIGH VOLTAGE(10kV、11kV) THREE-PHASE INDUCTION MOTORS (IC01)

电机型号 Motor Type	功率 Rated Power		额定转速 Rated Speed	效率 Efficiency	功率因数 Power Factor	电流 Current			转矩 Torque			转动惯量 Moment of inertia(J)	重量 Approx WT
						Full Load 10kV	Full Load 11kV	Locked Rotor	Full Load	Locked Rotor	Pull Out		
	KW	(HP)	RPM	%	%	A	A	%FLC	Kg-m	%FLT	%FLC	Kg-m²	Kg
OST4-630F6-10P	1120	1500	593	95.2	95.2	84.9	77.2	600	1841	70	180	234	7850
OST4-630F7-10P	1250	1680	593	95.3	95.3	94.7	86.1	600	2054	70	180	254	8180
OST4-630F8-10P	1400	1880	593	95.3	95.3	106.0	96.4	600	2301	70	180	275	8500
OST4-630F9-10P	1600	2140	593	95.3	95.3	121.2	110.2	600	2629	70	180	292	8830
OST4-500F3-12P	220	295	490	92.4	72	19.1	17.4	550	438	70	180	60.6	4560
OST4-500F4-12P	250	335	490	92.6	72	21.6	19.7	550	497	70	180	63.5	4730
OST4-500F5-12P	280	375	490	92.8	72	24.2	22.0	550	557	70	180	66.4	4910
OST4-500F6-12P	315	420	490	93.1	73	26.8	24.3	550	626	70	180	69.3	5070
OST4-500F7-12P	355	475	490	93.2	73	30.1	27.4	550	706	70	180	72.1	5240
OST4-560F2-12P	400	535	490	93.4	73	33.9	30.8	600	796	70	180	149	5810
OST4-560F3-12P	450	605	490	93.5	73	38.1	34.6	600	895	70	180	157	6010
OST4-560F4-12P	500	670	490	93.9	73	42.1	38.3	600	994	70	180	165	6220
OST4-560F5-12P	560	750	492	94.1	74	46.4	42.2	600	1109	70	180	174	6420
OST4-560F6-12P	630	845	493	94.3	74	52.1	47.4	600	1245	70	180	182	6620
OST4-630F5-12P	710	950	493	94.5	74	58.6	53.3	600	1403	70	180	210	7300
OST4-630F6-12P	800	1070	492	94.8	74	65.8	59.9	600	1585	70	180	231	7630
OST4-630F7-12P	900	1210	492	94.8	74	74.1	67.3	600	1783	70	180	249	7950
OST4-630F8-12P	1000	1340	492	94.8	74	82.3	74.8	600	1981	70	180	266	8280
OST4-630F9-12P	1120	1500	492	94.8	74	92.2	83.8	600	2218	70	180	287	8610

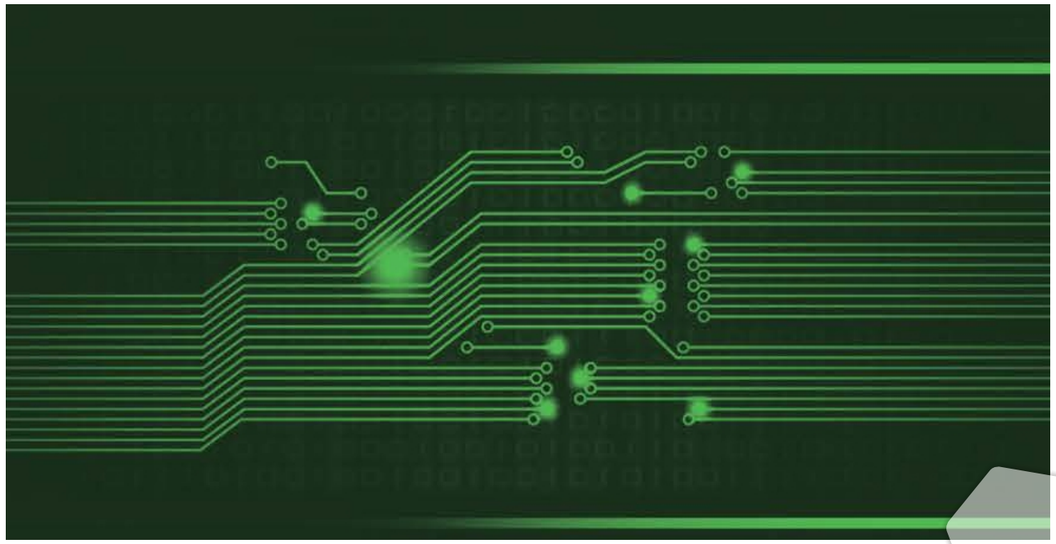

OST3、OST4系列 高压(6kV)三相异步电动机(IC01)

OST3、OST4 SERIES HIGH VOLTAGE(6kV) THREE-PHASE INDUCTION MOTORS (IC01)

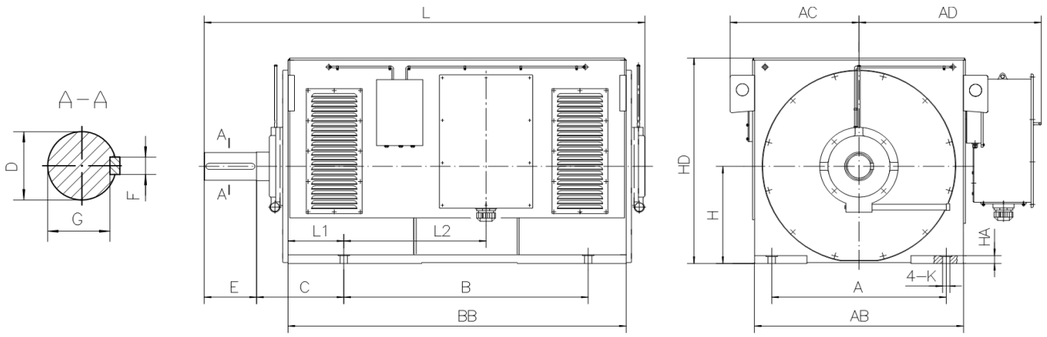

• 安装尺寸表MOUNTING DIMENSIONS FOR INSTALLATION

机座号 Frame	极 数 unting Dim	安装尺寸 Installation Dimensions													
		A	B	C	D		E	F		G		H		K1	
355	2	630±1.75	900±1.75	315±4	80	+0.030 +0.011	170±0.5	22	0 -0.052	71	0 -0.2	355	0 -1	28	+0.62 0
355	4～6	630±1.75	900±1.75	315±4	100	+0.035 +0.013	210±0.5	28	0 -0.052	90	0 -0.2	355	0 -1	28	+0.62 0
400	2	710±1.75	1000±1.75	375±4	90	+0.035 +0.013	170±0.5	25	0 -0.052	81	0 -0.2	400	0 -1	35	+0.62 0
400	4～8	710±1.75	1000±1.75	335±4	110	+0.035 +0.013	210±0.57	28	0 -0.052	100	0 -0.2	400	0 -1	35	+0.62 0
450	2	800±1.75	1120±1.75	400±4	100	+0.035 +0.013	210±0.57	28	0 -0.052	90	0 -0.2	450	0 -1	35	+0.62 0
450	4	800±1.75	1120±1.75	355±4	120	+0.035 +0.013	210±0.57	32	0 -0.062	109	0 -0.2	450	0 -1	35	+0.62 0
450	6～12	800±1.75	1120±1.75	355±4	130	+0.040 +0.015	250±0.57	32	0 -0.062	119	0 -0.2	450	0 -1	35	+0.62 0
500	2	900±2.1	1250±2.1	560±4	110	+0.035 +0.013	210±0.57	28	0 -0.052	100	0 -0.2	500	0 -1	42	+0.62 0
500	4	900±2.1	1250±2.1	475±4	130	+0.04 +0.015	250±0.57	32	0 -0.062	119	0 -0.2	500	0 -1	42	+0.62 0
500	6～10	900±2.1	1250±2.1	475±4	140	+0.04 +0.015	250±0.57	36	0 -0.062	128	0 -0.3	500	0 -1	42	+0.62 0
560	2	1000±2.1	1400±2.1	560±4	130	+0.04 +0.015	250±0.57	32	0 -0.062	119	0 -0.2	560	0 -1	42	+0.62 0
560	4	1000±2.1	1400±2.1	500±4	150	+0.04 +0.015	250±0.57	36	0 -0.062	138	0 -0.3	560	0 -1	42	+0.62 0
560	6～12	1000±2.1	1400±2.1	500±4	160	+0.04 +0.015	300±0.65	40	0 -0.062	147	0 -0.3	560	0 -1	42	+0.62 0
630	2	1120±2.1	1600±2.1	560±4	140	+0.04 +0.015	250±0.57	36	0 -0.062	128	0 -0.3	630	0 -1	48	+0.62 0
630	4	1120±2.1	1600±2.1	530±4	170	+0.04 +0.015	300±0.65	40	0 -0.062	157	0 -0.3	630	0 -1	48	+0.62 0
630	6～12	1120±2.1	1600±2.1	530±4	180	+0.04 +0.015	300±0.65	45	0 -0.062	165	0 -0.3	630	0 -1	48	+0.62 0

• 外形尺寸表OUTLINE DIMENSIONS FOR INSTALLATION

机座号 Frame	极 数 unting Dim	外形尺寸 Outline Dimensions								
		AC	AD	AB	BB	HA	HD	L1	L2	L
355	2	500	760	780	1350	25	760	189	561	1725
355	4～6	500	760	780	1400	25	760	189	617	1815
400	2	570	900	888	1450	30	850	249	606	1830
400	4～6	570	900	888	1510	30	850	209	626	2000
450	2	599	926	980	1530	40	960	255	515	1910
450	4	599	926	980	1638	32	960	242	657	2055
450	6~12	599	926	980	1638	32	960	242	657	2105
500	2	670	1000	1092	1720	50	1065	330	650	2250
500	4	670	1000	1092	1720	35	1065	310	669	2200
500	6～12	670	1000	1092	1720	35	1065	310	669	2200
560	2	740	1050	1196	1938	55	1185	270	865	2590
560	4	740	1050	1196	1938	45	1185	320	815	2475
560	6~12	740	1050	1196	1938	45	1185	320	815	2525
630	2	825	1150	1376	2100	55	1312	265	820	2770
630	4～12	825	1150	1376	2100	50	1312	365	820	2685

OST3、OST4系列(IP23)高压(10kV)三相异步电动机(IC01)

OST3、OST4 SERIES (IP23) HIGH VOLTAGE(10kV) THREE-PHASE INDUCTION MOTORS (IC01)

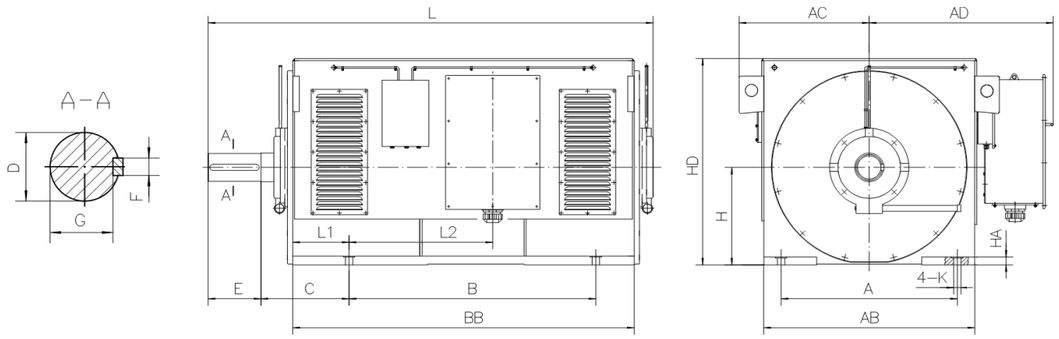

• 安装尺寸表MOUNTING DIMENSIONS FOR INSTALLATION

机座号 Frame	极 数 unting Dim	安装尺寸 Installation Dimensions													
		A	B	C	D		E	F		G		H		K1	
400	2	710±1.75	1000±1.75	375±4	90	+0.030 +0.011	170±0.5	25	0 -0.052	81	0 -0.2	400	0 -1	35	+0.62 0
400	4～8	710±1.75	1000±1.75	335±4	110	+0.035 +0.013	210±0.57	28	0 -0.052	100	0 -0.2	400	0 -1	35	+0.62 0
450	2	800±1.75	1120±1.75	400±4	90	+0.035 +0.013	170±0.57	25	0 -0.052	81	0 -0.2	450	0 -1	35	+0.62 0
450	4～8	800±1.75	1120±1.75	355±4	110	+0.035 +0.013	210±0.57	28	0 -0.062	100	0 -0.2	450	0 -1	35	+0.62 0
500	2	900±2.1	1250±2.1	560±4	100	+0.035 +0.013	210±0.57	28	0 -0.052	90	0 -0.2	500	0 -1	42	+0.62 0
500	4	900±2.1	1250±2.1	475±4	130	+0.04 +0.015	250±0.57	32	0 -0.062	119	0 -0.2	500	0 -1	42	+0.62 0
500	6～12	900±2.1	1250±2.1	475±4	130	+0.04 +0.015	250±0.57	32	0 -0.062	119	0 -0.3	500	0 -1	42	+0.62 0
560	2	1000±2.1	1400±2.1	560±4	130	+0.04 +0.015	250±0.57	32	0 -0.062	119	0 -0.2	560	0 -1	42	+0.62 0
560	4	1000±2.1	1400±2.1	500±4	150	+0.04 +0.015	250±0.57	36	0 -0.062	138	0 -0.3	560	0 -1	42	+0.62 0
560	6～12	1000±2.1	1400±2.1	500±4	160	+0.04 +0.015	300±0.65	40	0 -0.062	147	0 -0.3	560	0 -1	42	+0.62 0
630	2	1120±2.1	1600±2.1	560±4	140	+0.04 +0.015	250±0.57	36	0 -0.062	128	0 -0.3	630	0 -1	48	+0.62 0
630	4	1120±2.1	1600±2.1	530±4	170	+0.04 +0.015	300±0.65	40	0 -0.062	157	0 -0.3	630	0 -1	48	+0.62 0
630	6～12	1120±2.1	1600±2.1	530±4	180	+0.04 +0.015	300±0.65	45	0 -0.062	165	0 -0.3	630	0 -1	48	+0.62 0

• 外形尺寸表OUTLINE DIMENSIONS FOR INSTALLATION

机座号 Frame	极 数 unting Dim	外形尺寸 Outline Dimensions								
		AC	AD	AB	BB	HA	HD	L1	L2	L
400	2	570	900	900	1450	30	850	249	606	1830
400	4～6	570	900	900	1510	30	850	209	626	2000
450	2	600	926	980	1530	40	960	287	538	1910
450	4~8	600	926	980	1638	32	960	242	657	2055
500	2	670	1000	1092	1720	50	1065	330	650	2250
500	4	670	1000	1092	1720	35	1065	310	669	2200
500	6～12	670	1000	1092	1720	35	1065	310	669	2200
560	2	740	1050	1196	1938	55	1185	270	865	2590
560	4	740	1050	1196	1938	45	1185	320	815	2475
560	6~12	740	1050	1196	1938	45	1185	320	815	2525
630	2	825	1150	1376	2100	55	1312	265	820	2770
630	4～12	825	1150	1376	2100	50	1312	365	820	2685

OAW3、OAW4系列空-水冷高压三相异步电动机(IC81W)

OAW3、OAW4 SERIES AIR-WATER COOLING HIGH VOLTAGE THREE-PHASE INDUCTION MOTORS

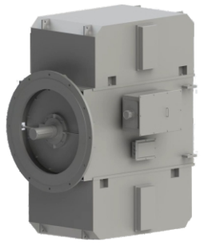

功率范围（Power）：710-10000KW；
机座范围（Frame）：H355-630。

基本技术要求及特点

- 防护等级：IP55
- 冷却方式：IC81W(可派生IC86W)；
- 安装形式：B3 (可派生V10)；
- 绝缘等级：F级，温升按B级考核；
- 工作制：S1
- 电压等级：6000V,10000V（可派生客户指定的电压)；
- 频率：50Hz（可派生60Hz，或指定的频率）；
- 功率范围：710-10000kW，
- 同步转速1500、1000、750、600、500、375rpm（可派生客户指定的转速）；
- 电动机符合JB/T 10315.1-2013《高压三相异步电动机技术条件第1部分：YKS、YKS-W、YQF系列（机座号355）》标准的要求。

使用环境

- 海拔不超过 1000m（可派生指定海拔高度使用的环境）
- 空气温度：0℃至+40℃
- 冷却水温度：5℃至+33℃
- 空气湿度：月平均最高相对湿度为90%，同时月平均温度不高于25℃；
- 环境场所：无可燃气体、无粉尘场所（可派生适应户外环境用“W”型，湿热带环境用“TH”型,户外湿热带环境用“WTH”型，户外中度防腐“WF1”型等）。

电源

- 允许电压波动±5%，频率波动±2%，电压和频率合并波动±5%。

结构

- 电动机采用钢板焊接结构，美观大方；
- 电动机设置不停机注排油装置；
- 电动机设置轴承测温pt100；绕组测温pt100等附件；
- 采用优质进口的滚动轴承结构，维修、安装方便；
- 转子采用铜笼结构，损耗小，可靠性高；
- 定子绕组经VPI处理，具有良好的电气性能和防潮能力。

Technical characteristics

- Protection class: IP55;
- Cooling method: IC81W, (IC86W can be derived);
- Installation form: B3 (V10 can be derived);
- Insulation class: F class, temperature rise is assessed according to B class;
- Working system: S1;
- Voltage class: 6000V, 10000V; (customer-specified voltage can be derived);
- Frequency: 50Hz (60Hz can be derived, or specified frequency);
- Power range: 710-10000kW;
- Synchronous speed: 1500, 1000, 750, 600, 500, 375rpm (customer-specified speed can be derived);
- The motor meets the requirements of GB/T13957 "Technical Conditions for Basic Series of Large Three-phase Asynchronous Motors".

Environment

- The altitude does not exceed 1000m (the environment for use at the specified altitude can be derived);
- Ambient air temperature: 0°C to +40°C ;
- Ambient air humidity: the monthly average maximum relative humidity is 90%, and the monthly average temperature is not higher than 25℃;
- Environmental place: no flammable gas, no dust place ("W" type for outdoor environment, "TH" type for outdoor humid tropical environment, "WTH" type for outdoor humid tropical environment, "WF1" type for outdoor moderate anti-corrosion Wait).

Power supply

- Allowable voltage fluctuation ±5%, frequency fluctuation ±2%, combined voltage and frequency fluctuation ±5%.

Structure

- The motor adopts steel plate welding structure, which is beautiful and elegant;
- The motor is equipped with a non-stop oil injection and discharge device;
- Motor set bearing temperature measurement pt100; winding temperature measurement pt100 and other accessories;
- Adopt high-quality imported rolling bearing structure (or domestic high-quality sliding), easy maintenance and installation;
- The rotor adopts copper cage structure, with low loss and high reliability;
- The stator winding is treated with VPI and has good electrical performance and moisture resistance.

OAW3系列空-水冷高压(6kV、6.6kV)三相异步电动机(IC81W)

OAW3 SERIES AIR-WATER COOLING HIGH VOLTAGE(6kV、6.6kV) THREE-PHASE INDUCTION MOTORS(IC81W)

电机型号 Motor Type	功率 Rated Power		额定转速 Rated Speed	效率 Efficiency	功率因数 Power Factor	电流 Current			转矩 Torque			惯性 Moment of Inertia	重量 Approx WT
						Locked Rotor 6kV	Locked Rotor 6.6kV	Full Load	Full Load	Locked Rotor	Pull Out		
	KW	(HP)	RPM	%	%	A	A	%FLC	Kg-m	%FLT	%FLC	Kg	
OAW3-355F1-02P	220	295	2975	92.0	86	26.8	24.3	700	72	60	180	3.4	2420
OAW3-355F2-02P	250	335	2975	92.1	86	30.4	27.6	700	82	60	180	3.4	2440
OAW3-355F3-02P	280	375	2975	92.3	86	33.9	30.9	700	92	60	180	3.7	2520
OAW3-355F4-02P	315	420	2975	92.7	86	38.0	34.6	700	103	60	180	4.0	2580
OAW3-355F5-02P	355	475	2975	93.0	86	42.7	38.8	700	116	60	180	4.2	2660
OAW3-355F6-02P	400	535	2975	93.4	86	47.9	43.6	700	131	60	180	4.5	2720
OAW3-400F1-02P	450	605	2980	93.7	86	53.7	48.9	700	147	60	180	7.8	2900
OAW3-400F2-02P	500	670	2980	94.0	87	58.8	53.5	700	164	60	180	8.4	2950
OAW3-400F3-02P	560	750	2980	94.1	87	65.8	59.8	700	183	60	180	8.8	3020
OAW3-400F4-02P	630	845	2980	94.3	87	73.9	67.2	700	206	60	180	9.1	3150
OAW3-450F1-02P	710	950	2980	94.4	87	83.2	75.6	700	232	60	180	9.8	3620
OAW3-450F2-02P	800	1070	2980	94.7	87	93.4	84.9	700	262	60	180	10.1	3750
OAW3-450F3-02P	900	1210	2980	94.8	87	105.0	95.5	700	294	60	180	11.2	3830
OAW3-450F4-02P	1000	1340	2980	94.9	88	115.2	104.8	700	327	60	180	12.4	3990
OAW3-500F1-02P	1120	1500	2980	95.0	88	128.9	117.2	700	366	60	180	17.4	4800
OAW3-500F2-02P	1250	1680	2980	95.2	88	143.6	130.5	700	409	60	180	18.3	4930
OAW3-500F3-02P	1400	1880	2980	95.3	88	160.6	146.0	700	458	60	180	19.7	5140
OAW3-500F4-02P	1600	2140	2980	95.4	88	183.4	166.7	700	523	60	180	21.5	5430
OAW3-560F1-02P	1800	2410	2980	95.5	88	206.1	187.4	700	589	60	180	35.4	6790
OAW3-560F2-02P	2000	2680	2980	95.7	88	228.5	207.8	700	654	60	180	37.5	6190
OAW3-560F3-02P	2240	3000	2980	95.8	88	255.7	232.4	700	733	60	180	39.6	7400
OAW3-630F1-02P	2500	3350	2982	95.9	89	281.9	256.2	700	817	60	180	56.8	9180
OAW3-630F2-02P	2800	3750	2982	96.0	89	315.4	286.7	700	915	60	180	62.0	9520
OAW3-630F3-02P	3150	4220	2982	96.1	89	354.4	322.2	700	1029	60	180	67.5	9860
OAW3-355F1-04P	185	250	1485	92.3	84	23.0	20.9	650	121	80	180	6.3	2400
OAW3-355F2-04P	200	270	1485	92.4	84	24.8	22.5	650	131	80	180	6.3	2450
OAW3-355F3-04P	220	295	1485	92.5	85	26.9	24.5	650	144	80	180	6.8	2490
OAW3-355F4-04P	250	335	1485	92.6	85	30.6	27.8	650	164	80	180	7.3	2570
OAW3-355F5-04P	280	375	1485	93.7	86	33.4	30.4	650	184	80	180	7.9	2650
OAW3-355F6-04P	315	420	1485	92.9	86	37.9	34.5	650	207	80	180	8.4	2730
OAW3-400F1-04P	355	475	1485	93.1	86	42.7	38.8	650	233	80	180	17.1	2940
OAW3-400F2-04P	400	535	1485	93.3	86	48.0	43.6	650	262	80	180	18.4	3110
OAW3-400F3-04P	450	605	1485	93.5	86	53.9	49.0	650	295	80	180	19.8	3220
OAW3-400F4-04P	500	670	1485	93.7	87	59.0	53.7	650	328	70	180	21.1	3350
OAW3-400F5-04P	560	750	1485	93.9	87	66.0	60.0	650	367	70	180	22.8	3460

OAW3系列空-水冷高压(6kV、6.6kV)三相异步电动机(IC81W)

OAW3 SERIES AIR-WATER COOLING HIGH VOLTAGE(6kV、6.6kV) THREE-PHASE INDUCTION MOTORS(IC81W)

电机型号 Motor Type	功率 Rated Power		额定转速 Rated Speed	效率 Efficiency	功率因数 Power Factor	电流 Current			转矩 Torque			惯性 Moment of Inertia	重量 Approx WT
						Locked Rotor 6kV	Locked Rotor 6.6kV	Full Load	Full Load	Locked Rotor	Pull Out		
	KW	(HP)	RPM	%	%	A	A	%FLC	Kg-m	%FLT	%FLC	Kg	
OAW3-450F1-04P	630	840	1485	94.2	87	74.0	67.2	650	413	80	180	25.3	3700
OAW3-450F2-04P	710	950	1485	94.4	87	83.2	75.6	650	466	80	180	27.4	3880
OAW3-450F3-04P	800	1070	1485	94.6	87	93.5	85.0	650	525	80	180	29.7	4050
OAW3-450F4-04P	900	1210	1485	94.7	87	105.1	95.6	650	591	80	180	30.6	4150
OAW3-500F1-04P	1000	1340	1485	94.8	87	116.7	106.1	650	656	70	180	45.2	5500
OAW3-500F2-04P	1120	1500	1485	94.9	88	129.1	117.3	650	735	70	180	50.8	5720
OAW3-500F3-04P	1250	1680	1485	95.1	88	143.7	130.7	650	820	60	180	53.4	5900
OAW3-500F4-04P	1400	1880	1485	95.2	88	160.8	146.2	650	919	60	180	58.3	6150
OAW3-560F1-04P	1600	2140	1485	95.3	89	181.5	165.0	650	1050	60	180	75.5	7400
OAW3-560F2-04P	1800	2410	1485	95.4	89	204.0	185.5	650	1181	60	180	80.2	7720
OAW3-560F3-04P	2000	2680	1485	95.6	89	226.2	205.6	650	1312	60	180	85.6	8130
OAW3-630F1-04P	2240	3000	1493	95.7	89	253.1	230.1	650	1462	60	180	126	9670
OAW3-630F2-04P	2500	3350	1493	95.8	89	282.2	256.5	650	1632	60	180	134	9920
OAW3-630F3-04P	2800	3750	1493	95.9	89	315.7	287.0	650	1828	60	180	142	10170
OAW3-355F1-06P	185	250	985	91.8	81	23.9	21.8	600	183	80	180	9.9	2560
OAW3-355F2-06P	200	270	985	92.0	81	25.8	23.5	600	198	80	180	10.8	2640
OAW3-355F3-06P	220	295	985	92.2	82	28.0	25.5	600	218	80	180	11.2	2720
OAW3-355F4-06P	250	335	985	92.5	82	31.7	28.8	600	247	80	180	12.2	2830
OAW3-400F1-06P	280	375	985	92.7	83	35.0	31.8	600	277	80	180	20.2	3050
OAW3-400F2-06P	315	420	985	93.0	83	39.3	35.7	600	312	80	180	21.6	3190
OAW3-400F3-06P	355	475	985	93.2	83	44.2	40.1	600	351	80	180	23.5	3220
OAW3-400F4-06P	400	535	990	93.3	83	49.7	45.2	600	394	80	180	26.2	3480
OAW3-450F1-06P	450	605	990	93.6	84	55.1	50.1	600	443	80	180	32.2	3850
OAW3-450F2-06P	500	670	990	93.9	85	60.3	54.8	600	492	80	180	35.2	4000
OAW3-450F3-06P	560	750	990	94.1	85	67.4	61.2	600	551	70	180	38.8	4180
OAW3-450F4-06P	630	840	990	94.2	85	75.7	68.8	600	620	70	180	42.6	4370
OAW3-500F1-06P	710	950	990	94.4	85	85.1	77.4	600	699	70	180	56.8	4900
OAW3-500F2-06P	800	1070	990	94.6	85	95.7	87.0	600	787	70	180	60.6	5210
OAW3-500F3-06P	900	1210	991	94.7	85	107.6	97.8	650	885	70	180	66.0	5440
OAW3-500F4-06P	1000	1340	991	94.8	85	119.4	108.6	650	983	70	180	72.1	5660
OAW3-560F1-06P	1120	1500	991	94.9	86	132.1	120.0	650	1101	70	180	100	6850
OAW3-560F2-06P	1250	1680	993	95.1	86	147.1	133.7	650	1227	70	180	101	7040
OAW3-560F3-06P	1400	1880	994	95.2	86	164.5	149.6	650	1373	70	180	118	7320
OAW3-630F1-06P	1600	2140	994	95.3	86	187.9	170.8	650	1569	70	180	150	9150
OAW3-630F2-06P	1800	2410	994	95.4	86	211.1	191.9	650	1765	70	180	163	9450

OAW3系列空-水冷高压(6kV、6.6kV)三相异步电动机(IC81W)

OAW3 SERIES AIR-WATER COOLING HIGH VOLTAGE(6kV、6.6kV) THREE-PHASE INDUCTION MOTORS(IC81W)

电机型号 Motor Type	功率 Rated Power		额定转速 Rated Speed	效率 Efficiency	功率因数 Power Factor	电流 Current			转矩 Torque			惯性 Moment of Inertia	重量 Approx WT
						Locked Rotor 6kV	Locked Rotor 6.6kV	Full Load	Full Load	Locked Rotor	Pull Out		
	KW	(HP)	RPM	%	%	A	A	%FLC	Kg-m	%FLT	%FLC	Kg	
OAW3-630F3-06P	2000	2680	994	95.6	86	234.1	212.8	650	1961	70	180	175	9810
OAW3-400F1-08P	185	250	740	91.8	77	25.2	22.9	550	244	80	180	21.6	2930
OAW3-400F2-08P	200	270	740	92.0	78	26.8	24.4	550	263	80	180	23.5	3030
OAW3-400F3-08P	220	295	740	92.1	78	29.5	26.8	550	290	80	180	25.4	3120
OAW3-400F4-08P	250	335	740	92.2	79	33.0	30.0	550	329	80	180	27.3	3250
OAW3-400F5-08P	280	375	740	92.4	79	36.9	33.6	550	369	80	180	29.1	3350
OAW3-450F1-08P	315	420	740	92.7	80	40.9	37.2	550	415	80	180	34.2	3800
OAW3-450F2-08P	355	475	740	92.8	80	46.0	41.8	550	467	80	180	36.5	4090
OAW3-450F3-08P	400	535	740	93.0	80	51.7	47.0	550	527	80	180	38.8	4380
OAW3-450F4-08P	450	605	740	93.1	81	57.4	52.2	550	593	80	180	42.6	4570
OAW3-500F1-08P	500	670	740	93.7	81	63.4	57.6	550	658	80	180	68.2	5150
OAW3-500F2-08P	560	750	740	93.8	82	70.1	63.7	550	737	80	180	75.0	5310
OAW3-500F3-08P	630	840	740	93.9	82	78.7	71.6	600	830	70	180	81.8	5600
OAW3-500F4-08P	710	950	740	94.0	82	88.6	80.6	600	935	70	180	89.4	5780
OAW3-560F1-08P	800	1070	740	94.2	84	97.3	88.4	600	1054	70	180	127	6550
OAW3-560F2-08P	900	1210	744	94.3	84	109.3	99.4	600	1179	70	180	135	6850
OAW3-560F3-08P	1000	1340	744	94.4	84	121.4	110.3	600	1310	70	180	143	7250
OAW3-630F1-08P	1120	1500	744	94.5	84	135.8	123.4	600	1467	70	180	177	8680
OAW3-630F2-08P	1250	1680	744	94.7	84	151.2	137.5	600	1637	70	180	189	8800
OAW3-630F3-08P	1400	1880	744	94.8	84	169.2	153.8	600	1834	70	180	200	9010
OAW3-630F4-08P	1600	2140	744	94.9	84	193.1	175.6	600	2096	70	180	222	9320
OAW3-400F1-10P	185	250	590	90.9	75	26.1	23.7	550	306	80	180	26.9	3240
OAW3-400F2-10P	200	270	590	91.1	76	27.8	25.3	550	330	80	180	29.2	3430
OAW3-450F1-10P	220	295	590	91.3	77	30.1	27.4	550	363	80	180	35.2	3860
OAW3-450F2-10P	250	335	590	91.5	78	33.7	30.6	550	413	80	180	38.0	3990
OAW3-450F3-10P	280	375	590	91.7	78	37.7	34.2	550	462	80	180	41.9	4180
OAW3-450F4-10P	315	420	590	91.9	79	41.8	38.0	550	520	80	180	44.1	4390
OAW3-450F5-10P	355	475	590	92.1	79	47.0	42.7	550	586	80	180	45.3	4600
OAW3-500F1-10P	400	535	590	92.6	80	52.0	47.2	550	661	80	180	59.7	5120
OAW3-500F2-10P	450	605	590	92.7	80	58.4	53.1	550	743	80	180	65.6	5360
OAW3-500F3-10P	500	670	590	93.0	80	64.7	58.8	550	826	80	180	71.5	5560
OAW3-500F4-10P	560	750	590	93.1	80	72.4	65.8	600	925	70	180	78.2	5750
OAW3-500F5-10P	630	840	590	93.2	80	81.3	73.9	600	1041	70	180	84.9	5890
OAW3-560F1-10P	710	950	590	93.4	82	89.2	81.1	600	1173	70	180	135	6800
OAW3-560F2-10P	800	1070	594	93.7	82	100.2	91.1	600	1312	70	180	143	7050

OAW3系列空-水冷高压(6kV、6.6kV)三相异步电动机(IC81W)

OAW3 SERIES AIR-WATER COOLING HIGH VOLTAGE(6kV、6.6kV) THREE-PHASE INDUCTION MOTORS (IC81W)

电机型号 Motor Type	功率 Rated Power		额定转速 Rated Speed	效率 Efficiency	功率因数 Power Factor	电流 Current			转矩 Torque			惯性 Moment of Inertia	重量 Approx WT
						Locked Rotor 6kV	Locked Rotor 6.6kV	Full Load	Full Load	Locked Rotor	Pull Out		
	KW	(HP)	RPM	%	%	A	A	%FLC	Kg-m	%FLT	%FLC	Kg	
OAW3-560F3-10P	900	1210	594	93.8	82	112.6	102.4	600	1476	70	180	153	7430
OAW3-630F1-10P	1000	1340	594	93.9	82	125.0	113.6	600	1641	70	180	196	8530
OAW3-630F2-10P	1120	1500	594	94.1	82	139.7	127.0	600	1837	70	180	205	8900
OAW3-630F3-10P	1250	1680	594	94.4	82	155.4	141.3	600	2051	70	180	224	9200
OAW3-630F4-10P	1400	1880	594	94.5	82	173.9	158.0	600	2297	70	180	231	9550
OAW3-450F1-12P	185	250	490	90.1	72	27.4	24.9	550	368	80	180	34.3	3600
OAW3-450F2-12P	200	270	490	90.3	72	29.6	26.9	550	398	80	180	37.8	3710
OAW3-450F3-12P	220	295	490	90.6	73	32.0	29.1	550	438	80	180	40.8	3910
OAW3-450F4-12P	250	335	490	90.9	73	36.3	33.0	550	497	80	180	43.2	4140
OAW3-500F1-12P	280	375	490	91.9	74	39.6	36.0	550	557	80	180	61.1	5220
OAW3-500F2-12P	315	420	490	92.1	75	43.9	39.9	550	626	80	180	63.8	5390
OAW3-500F3-12P	355	475	490	92.3	75	49.3	44.9	600	706	70	180	66.6	5550
OAW3-500F4-12P	400	535	490	92.6	75	55.4	50.4	600	796	70	180	66.6	5750
OAW3-500F5-12P	450	605	490	92.7	75	62.3	56.6	600	895	70	180	69.3	5810
OAW3-560F1-12P	500	670	490	93.1	79	65.4	59.5	600	994	70	180	129	6500
OAW3-560F2-12P	560	750	494	93.2	79	73.2	66.5	600	1105	70	180	142	6780
OAW3-560F3-12P	630	840	494	93.3	79	82.2	74.8	600	1243	70	180	155	7070
OAW3-630F1-12P	710	950	494	93.4	79	92.6	84.2	600	1401	70	180	202	8270
OAW3-630F2-12P	800	1070	494	93.7	79	104.0	94.5	600	1578	70	180	219	8480
OAW3-630F3-12P	900	1210	494	93.8	79	116.9	106.2	600	1775	70	180	236	8900
OAW3-630F4-12P	1000	1340	494	93.9	79	129.7	117.9	600	1973	70	180	258	9120

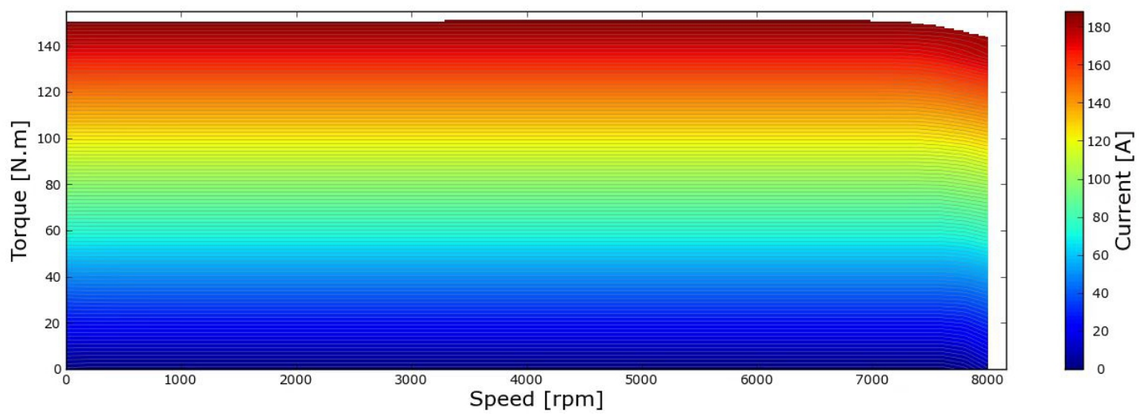

OAW3系列空-水冷高压(10kV、11kV)三相异步电动机(IC81W)

OAW3 SERIES AIR-WATER COOLING HIGH VOLTAGE(10kV、11kV) THREE-PHASE INDUCTION MOTORS (IC81W)

电机型号 Motor Type	功率 Rated Power		额定转速 Rated Speed	效率 Efficiency	功率因数 Power Factor	电流 Current			转矩 Torque			惯性 Moment of Inertia	重量 Approx WT
						Locked Rotor 10kV	Locked Rotor 11kV	Full Load	Full Load	Locked Rotor	Pull Out		
	KW	(HP)	RPM	%	%	A	A	%FLC	Kg-m	%FLT	%FLC	Kg	
OAW3-400F1-02P	220	295	2980	91.9	86	16.1	14.6	750	72	60	180	7.2	2850
OAW3-400F2-02P	250	335	2980	92.1	86	18.2	16.6	750	82	60	180	7.2	2860
OAW3-400F3-02P	280	375	2980	92.3	86	20.4	18.5	750	92	60	180	7.4	2930
OAW3-400F4-02P	315	420	2980	92.7	86	22.8	20.7	750	103	60	180	7.6	2960
OAW3-400F5-02P	355	475	2980	93.1	86	25.6	23.3	700	116	60	180	7.8	2990
OAW3-400F6-02P	400	535	2980	93.4	86	28.8	26.1	700	131	60	180	8.4	3050
OAW3-400F7-02P	450	605	2980	93.6	86	32.3	29.3	700	147	60	180	8.9	3150
OAW3-450F1-02P	500	670	2980	93.8	87	35.4	32.2	700	164	60	180	9.2	3630
OAW3-450F2-02P	560	750	2980	93.9	87	39.6	36.0	700	183	60	180	9.2	3640
OAW3-450F3-02P	630	845	2980	94.0	87	44.5	40.4	700	206	60	180	10.1	3700
OAW3-450F4-02P	710	950	2980	94.1	87	50.1	45.5	700	232	60	180	10.1	3800
OAW3-450F5-02P	800	1070	2980	94.3	87	56.3	51.2	700	262	60	180	11.2	3990
OAW3-500F1-02P	900	1210	2980	94.4	88	62.6	56.9	700	294	60	180	17.0	4680
OAW3-500F2-02P	1000	1340	2980	94.5	88	69.4	63.1	700	327	60	180	18.3	4850
OAW3-500F3-02P	1120	1500	2980	94.7	88	77.6	70.5	700	366	60	180	19.7	5010
OAW3-500F4-02P	1250	1680	2980	95.0	88	86.3	78.5	700	409	60	180	21.6	5260
OAW3-500F5-02P	1400	1880	2980	95.1	88	96.6	87.8	700	458	60	180	23.7	5410
OAW3-560F1-02P	1600	2140	2980	95.2	88	110.3	100.2	700	523	60	180	35.4	6230
OAW3-560F2-02P	1800	2410	2982	95.3	89	122.5	111.4	700	588	60	180	37.5	6740
OAW3-560F3-02P	2000	2680	2982	95.5	89	135.9	123.5	700	654	60	180	39.6	6940
OAW3-630F1-02P	2240	3000	2982	95.7	89	151.8	138.0	700	732	60	180	69	8980
OAW3-630F2-02P	2500	3350	2982	95.8	89	169.3	153.9	700	817	60	180	73	9050
OAW3-630F3-02P	2800	3750	2982	95.9	89	189.4	172.2	700	915	60	180	76	9520
OAW3-630F4-02P	3150	4220	2982	96.0	89	212.9	193.5	700	1029	60	180	80	9990
OAW3-400F1-04P	220	295	1480	91.9	85	16.3	14.8	700	145	70	180	15.7	2990
OAW3-400F2-04P	250	335	1480	92.1	85	18.4	16.8	700	165	70	180	15.7	3010
OAW3-400F3-04P	280	375	1480	92.2	85	20.6	18.8	700	184	70	180	16.5	3150
OAW3-400F4-04P	315	420	1480	92.5	85	23.1	21.0	700	207	70	180	17.1	3220
OAW3-400F5-04P	355	475	1485	92.6	86	25.7	23.4	700	233	70	180	18.4	3310
OAW3-400F6-04P	400	535	1485	92.8	86	28.9	26.3	700	262	70	180	19.8	3410
OAW3-400F7-04P	450	605	1485	93.2	86	32.4	29.5	700	295	70	180	21.7	3540
OAW3-450F1-04P	500	670	1485	93.4	86	35.9	32.7	700	328	70	180	21.3	3710
OAW3-450F2-04P	560	750	1485	93.6	86	40.2	36.5	700	367	70	180	23.0	3800
OAW3-450F3-04P	630	845	1485	93.8	86	45.1	41.0	700	413	70	180	25.3	3890
OAW3-450F4-04P	710	950	1485	94.4	87	49.9	45.4	700	466	70	180	27.4	3950

OAW3系列空-水冷高压(10kV、11kV)三相异步电动机(IC81W)

OAW3 SERIES AIR-WATER COOLING HIGH VOLTAGE (10kV、11kV) THREE-PHASE INDUCTION MOTORS (IC81W)

电机型号 Motor Type	功率 Rated Power		额定转速 Rated Speed	效率 Efficiency	功率因数 Power Factor	电流 Current			转矩 Torque			惯性 Moment of Inertia	重量 Approx WT
						Locked Rotor 10kV	Locked Rotor 11kV	Full Load	Full Load	Locked Rotor	Pull Out		
	KW	(HP)	RPM	%	%	A	A	%FLC	Kg-m	%FLT	%FLC	Kg	
OAW3-450F5-04P	800	1070	1485	94.6	87	56.1	51.0	700	525	70	180	29.7	4040
OAW3-500F1-04P	900	1210	1485	94.7	88	62.4	56.7	700	591	70	180	51.7	4990
OAW3-500F2-04P	1000	1340	1485	94.8	88	69.2	62.9	700	656	70	180	55.0	5150
OAW3-500F3-04P	1120	1500	1485	94.9	88	77.4	70.4	700	735	70	180	60.2	5380
OAW3-500F4-04P	1250	1680	1485	95.1	89	85.3	77.5	700	820	70	180	64.8	5620
OAW3-500F5-04P	1400	1880	1485	95.3	89	95.3	86.6	700	919	70	180	69.4	5860
OAW3-560F1-04P	1600	2140	1485	95.4	89	108.8	98.9	700	1050	70	180	98	6910
OAW3-560F2-04P	1800	2410	1492	95.5	89	122.3	111.2	700	1176	70	180	103	7320
OAW3-560F3-04P	2000	2680	1493	95.7	89	135.6	123.3	700	1305	70	180	108	7830
OAW3-630F1-04P	2240	3000	1493	95.8	89	151.7	137.9	700	1462	60	180	149	9020
OAW3-630F2-04P	2500	3350	1493	95.8	89	169.3	153.9	700	1632	60	180	156	9270
OAW3-630F3-04P	2800	3750	1493	95.8	89	189.6	172.4	700	1828	60	180	164	9620
OAW3-630F4-04P	3150	4220	1493	95.9	89	213.1	193.7	700	2056	60	180	172	9870
OAW3-400F1-06P	220	295	990	91.4	80	17.4	15.8	600	217	70	180	21.6	2960
OAW3-400F2-06P	250	335	990	91.6	80	19.7	17.9	600	246	70	180	23.5	3050
OAW3-400F3-06P	280	375	990	91.8	80	22.0	20.0	600	276	70	180	24.4	3150
OAW3-400F4-06P	315	420	990	92.1	82	24.1	21.9	600	310	70	180	25.3	3270
OAW3-450F1-06P	355	475	990	92.4	83	26.7	24.3	600	349	70	180	27.6	3540
OAW3-450F2-06P	400	535	990	92.6	83	30.0	27.3	600	394	70	180	29.4	3640
OAW3-450F3-06P	450	605	990	92.8	83	33.7	30.7	600	443	70	180	32.2	3800
OAW3-450F4-06P	500	670	995	93.3	83	37.3	33.9	600	490	70	180	35.5	3990
OAW3-450F5-06P	560	750	995	93.5	84	41.2	37.4	600	548	70	180	38.8	4080
OAW3-500F1-06P	630	845	995	93.8	84	46.2	42.0	600	617	70	180	52.9	4800
OAW3-500F2-06P	710	950	995	94.0	84	51.9	47.2	600	695	70	180	56.8	4960
OAW3-500F3-06P	800	1070	995	94.2	84	58.4	53.1	600	784	70	180	60.6	5010
OAW3-500F4-06P	900	1210	990	94.4	85	64.8	58.9	600	886	70	180	66.0	5240
OAW3-500F5-06P	1000	1340	990	94.6	85	71.8	65.3	600	984	70	180	72.1	5360
OAW3-560F1-06P	1120	1500	990	94.8	85	80.2	73.0	600	1102	70	180	105	6070
OAW3-560F2-06P	1250	1680	990	95.0	86	88.3	80.3	600	1230	70	180	115	6250
OAW3-560F3-06P	1400	1880	995	95.3	86	98.6	89.7	600	1371	70	180	128	6820
OAW3-560F4-06P	1600	2140	995	95.4	86	112.6	102.4	600	1567	70	180	135	7100
OAW3-630F1-06P	1800	2410	995	95.5	86	126.5	115.0	600	1763	60	180	169	8970
OAW3-630F2-06P	2000	2680	995	95.6	86	140.5	127.7	600	1959	60	180	178	9020
OAW3-630F3-06P	2240	3000	995	95.6	86	157.3	143.0	600	2194	60	180	191	9230
OAW3-630F4-06P	2500	3350	995	95.6	86	175.6	159.6	600	2448	60	180	206	9670

OAW3系列空-水冷高压(10kV、11kV)三相异步电动机(IC81W)

OAW3 SERIES AIR-WATER COOLING HIGH VOLTAGE (10kV、11kV) THREE-PHASE INDUCTION MOTORS (IC81W)

电机型号 Motor Type	功率 Rated Power		额定转速 Rated Speed	效率 Efficiency	功率因数 Power Factor	电流 Current			转矩 Torque			惯性 Moment of Inertia	重量 Approx WT
						Locked Rotor 10kV	Locked Rotor 11kV	Full Load	Full Load	Locked Rotor	Pull Out		
	KW	(HP)	RPM	%	%	A	A	%FLC	Kg-m	%FLT	%FLC	Kg	
OAW3-450F1-08P	220	295	740	91.1	76	18.3	16.7	600	290	70	180	26.5	3540
OAW3-450F2-08P	250	335	740	91.3	76	20.8	18.9	600	329	70	180	27.3	3640
OAW3-450F3-08P	280	375	740	91.6	76	23.2	21.1	600	369	70	180	28.2	3800
OAW3-450F4-08P	315	420	740	92.1	77	25.6	23.3	600	415	70	180	30.5	3990
OAW3-450F5-08P	355	475	740	92.4	77	28.8	26.2	600	467	70	180	32.8	4180
OAW3-500F1-08P	400	535	740	92.5	78	32.0	29.1	600	527	70	180	55.7	4500
OAW3-500F2-08P	450	605	740	92.7	78	35.9	32.7	600	593	70	180	62.4	4700
OAW3-500F3-08P	500	670	740	93.2	79	39.2	35.6	600	658	70	180	68.2	4950
OAW3-500F4-08P	560	750	740	93.3	79	43.9	39.9	600	737	70	180	75.0	5240
OAW3-500F5-08P	630	845	740	93.8	82	47.3	43.0	600	830	70	180	78.8	5490
OAW3-500F6-08P	710	950	740	94.0	82	53.2	48.3	600	935	70	180	82.4	5730
OAW3-560F1-08P	800	1070	740	94.2	82	59.8	54.4	600	1054	70	180	155	6750
OAW3-560F2-08P	900	1210	740	94.3	82	67.2	61.1	600	1185	70	180	162	6950
OAW3-560F3-08P	1000	1340	744	94.5	83	73.6	66.9	600	1310	70	180	171	7150
OAW3-560F4-08P	1120	1500	744	94.7	83	82.3	74.8	600	1467	70	180	179	7560
OAW3-630F1-08P	1250	1680	745	94.9	83	91.6	83.3	600	1635	70	180	229	8600
OAW3-630F2-08P	1400	1880	745	94.9	83	102.6	93.3	600	1831	70	180	240	8810
OAW3-630F3-08P	1600	2140	745	94.9	83	117.3	106.6	600	2093	70	180	252	9120
OAW3-630F4-08P	1800	2410	745	94.9	83	131.9	119.9	600	2354	70	180	263	9430
OAW3-450F1-10P	220	295	595	91.0	72	19.4	17.6	550	360	70	180	32.2	3660
OAW3-450F2-10P	250	335	595	91.2	73	21.7	19.7	550	409	70	180	36.0	3890
OAW3-500F1-10P	280	375	595	91.6	74	23.8	21.7	550	459	70	180	47.6	4710
OAW3-500F2-10P	315	420	595	91.9	74	26.7	24.3	550	516	70	180	52.7	4920
OAW3-500F3-10P	355	475	595	92.1	75	29.7	27.0	550	581	70	180	57.6	5060
OAW3-500F4-10P	400	535	595	92.3	75	33.4	30.3	550	655	70	180	63.5	5150
OAW3-500F5-10P	450	605	590	92.5	77	36.5	33.2	600	743	70	180	69.2	5380
OAW3-500F6-10P	500	670	590	92.8	77	40.4	36.7	600	826	70	180	76.9	5550
OAW3-560F1-10P	560	750	590	92.9	78	44.6	40.6	600	925	70	180	131	6210
OAW3-560F2-10P	630	845	590	93.1	78	50.1	45.5	600	1041	70	180	139	6310
OAW3-560F3-10P	710	950	590	93.3	78	56.3	51.2	600	1173	70	180	155	6710
OAW3-560F4-10P	800	1070	594	93.8	80	61.6	56.0	600	1312	70	180	163	6900
OAW3-560F5-10P	900	1210	593	94.0	80	69.1	62.8	600	1479	70	180	171	7200
OAW3-630F1-10P	1000	1340	593	94.1	80	76.7	69.7	600	1643	70	180	207	8060
OAW3-630F2-10P	1120	1500	593	94.2	80	85.8	78.0	600	1841	70	180	225	8380
OAW3-630F3-10P	1250	1680	593	94.3	80	95.7	87.0	600	2054	70	180	244	8700

OAW3系列空-水冷高压(10kV、11kV)三相异步电动机(IC81W)

OAW3 SERIES AIR-WATER COOLING HIGH VOLTAGE(10kV、11kV) THREE-PHASE INDUCTION MOTORS(IC81W)

电机型号 Motor Type	功率 Rated Power		额定转速 Rated Speed	效率 Efficiency	功率因数 Power Factor	电流 Current			转矩 Torque			惯性 Moment of Inertia	重量 Approx WT
						Locked Rotor 10kV	Locked Rotor 11kV	Full Load	Full Load	Locked Rotor	Pull Out		
	KW	(HP)	RPM	%	%	A	A	%FLC	Kg-m	%FLT	%FLC	Kg	
OAW3-630F4-10P	1400	1880	593	94.3	80	107.1	97.4	600	2301	70	180	264	9010
OAW3-630F5-10P	1600	2140	593	94.3	80	122.5	111.3	600	2629	70	180	281	9430
OAW3-500F1-12P	220	295	490	90.9	72	19.4	17.6	550	438	70	180	58.3	5010
OAW3-500F2-12P	250	335	490	91.1	72	22.0	20.0	550	497	70	180	61.1	5170
OAW3-500F3-12P	280	375	490	91.3	72	24.6	22.4	550	557	70	180	63.8	5240
OAW3-500F4-12P	315	420	490	91.6	73	27.2	24.7	550	626	70	180	66.6	5400
OAW3-500F5-12P	355	475	490	91.8	73	30.6	27.8	550	706	70	180	69.3	5660
OAW3-560F1-12P	400	535	490	92.0	74	33.9	30.8	600	796	70	180	143	6310
OAW3-560F2-12P	450	605	490	92.2	74	38.1	34.6	600	895	70	180	151	6510
OAW3-560F3-12P	500	670	490	92.6	75	41.6	37.8	600	994	70	180	159	6710
OAW3-560F4-12P	560	750	492	92.9	75	46.4	42.2	600	1109	70	180	167	6900
OAW3-560F5-12P	630	845	493	93.1	75	52.1	47.4	600	1245	70	180	175	7200
OAW3-630F1-12P	710	950	493	93.3	76	57.8	52.6	600	1403	70	180	202	7950
OAW3-630F2-12P	800	1070	492	93.8	76	64.8	58.9	600	1585	70	180	222	8270
OAW3-630F3-12P	900	1210	492	93.8	77	71.9	65.4	600	1783	70	180	239	8480
OAW3-630F4-12P	1000	1340	492	93.8	77	79.9	72.7	600	1981	70	180	256	8800
OAW3-630F5-12P	1120	1500	492	93.8	77	89.5	81.4	600	2218	70	180	276	9320

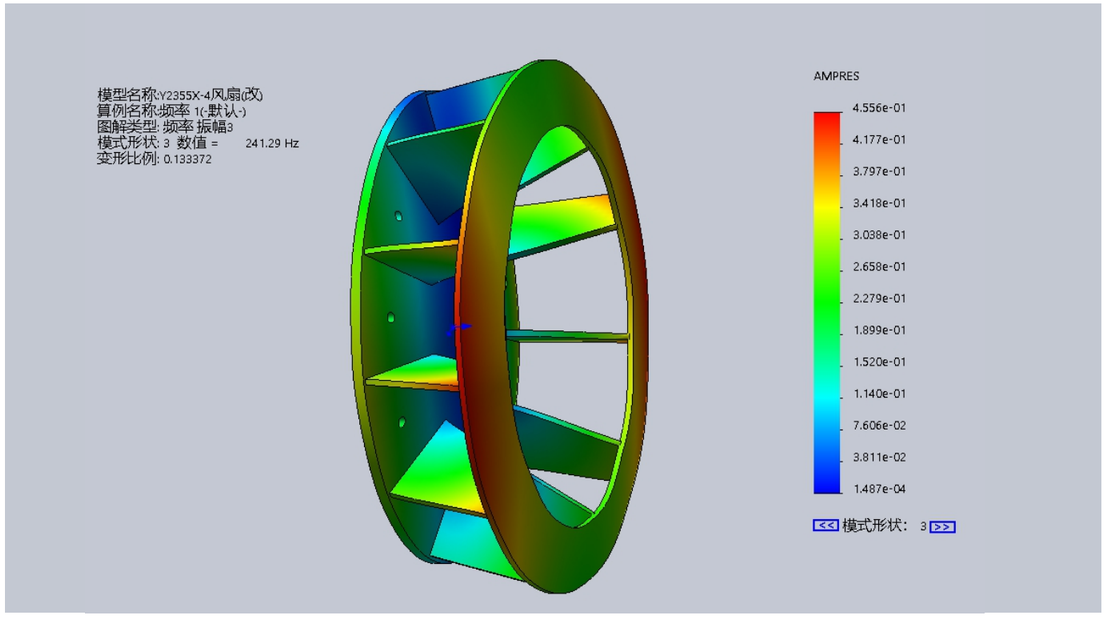

OAW4系列空-水冷高压(6kV、6.6kV)三相异步电动机(IC81W)

OAW4 SERIES AIR-WATER COOLING HIGH VOLTAGE(6kV、6.6kV) THREE-PHASE INDUCTION MOTORS(IC81W)

电机型号 Motor Type	功率 Rated Power		额定转速 Rated Speed	效率 Efficiency	功率因数 Power Factor	电流 Current			转矩 Torque			惯性 Moment of Inertia	重量 Approx WT
						Locked Rotor 6kV	Locked Rotor 6.6kV	Full Load	Full Load	Locked Rotor	Pull Out		
	KW	(HP)	RPM	%	%	A	A	%FLC	Kg-m	%FLT	%FLC	Kg	
OAW4-355F1-02P	220	295	2975	93.3	86	26.4	24.0	700	72	60	180	3.4	2520
OAW4-355F2-02P	250	335	2975	93.4	86	29.9	27.2	700	82	60	180	3.4	2560
OAW4-355F3-02P	280	375	2975	93.6	86	33.5	30.4	700	92	60	180	3.7	2620
OAW4-355F4-02P	315	420	2975	93.9	86	37.5	34.1	700	103	60	180	4.0	2680
OAW4-355F5-02P	355	475	2975	94.1	86	42.2	38.4	700	116	60	180	4.2	2720
OAW4-355F6-02P	400	535	2975	94.5	86	47.4	43.1	700	131	60	180	4.5	2780
OAW4-400F1-02P	450	605	2980	94.7	86	53.2	48.3	700	147	60	180	7.8	2980
OAW4-400F2-02P	500	670	2980	95.0	87	58.2	52.9	700	164	60	180	8.4	3020
OAW4-400F3-02P	560	750	2980	95.1	87	65.1	59.2	700	183	60	180	8.8	3150
OAW4-400F4-02P	630	845	2980	95.2	87	73.2	66.5	700	206	60	180	9.1	3250
OAW4-450F1-02P	710	950	2980	95.3	87	82.4	74.9	700	232	60	180	9.8	3670
OAW4-450F2-02P	800	1070	2980	95.6	87	92.6	84.1	700	262	60	180	10.1	3800
OAW4-450F3-02P	900	1210	2980	95.7	87	104.0	94.6	700	294	60	180	11.2	3860
OAW4-450F4-02P	1000	1340	2980	95.8	88	114.1	103.8	700	327	60	180	12.4	3990
OAW4-500F1-02P	1120	1500	2980	95.9	88	127.7	116.1	700	366	60	180	17.4	4850
OAW4-500F2-02P	1250	1680	2980	96.1	88	142.2	129.3	700	409	60	180	18.3	4980
OAW4-500F3-02P	1400	1880	2980	96.2	88	159.1	144.7	700	458	60	180	19.7	5190
OAW4-500F4-02P	1600	2140	2980	96.3	88	181.7	165.2	700	523	60	180	21.5	5480
OAW4-560F1-02P	1800	2410	2980	96.3	88	204.4	185.8	700	589	60	180	35.4	6750
OAW4-560F2-02P	2000	2680	2980	96.5	88	226.6	206.0	700	654	60	180	37.5	6250
OAW4-560F3-02P	2240	3000	2980	96.6	88	253.6	230.5	700	733	60	180	39.6	7450
OAW4-630F1-02P	2500	3350	2982	96.6	89	279.8	254.4	700	817	60	180	56.8	9230
OAW4-630F2-02P	2800	3750	2982	96.7	89	313.1	284.6	700	915	60	180	62.0	9580
OAW4-630F3-02P	3150	4220	2982	96.8	89	351.8	319.9	700	1029	60	180	67.5	9890
OAW4-355F1-04P	185	250	1485	92.5	84	22.9	20.8	650	121	80	180	6.3	2500
OAW4-355F2-04P	200	270	1485	93.1	84	24.6	22.4	650	131	80	180	6.3	2550
OAW4-355F3-04P	220	295	1485	93.7	85	26.6	24.2	650	144	80	180	6.8	2590
OAW4-355F4-04P	250	335	1485	93.8	85	30.2	27.4	650	164	80	180	7.3	2630
OAW4-355F5-04P	280	375	1485	93.9	86	33.4	30.3	650	184	80	180	7.9	2680
OAW4-355F6-04P	315	420	1485	94.1	86	37.5	34.1	650	207	80	180	8.4	2790
OAW4-400F1-04P	355	475	1485	94.3	86	42.1	38.3	650	233	80	180	17.1	2990
OAW4-400F2-04P	400	535	1485	94.4	86	47.4	43.1	650	262	80	180	18.4	3160
OAW4-400F3-04P	450	605	1485	94.6	86	53.2	48.4	650	295	80	180	19.8	3280
OAW4-400F4-04P	500	670	1485	94.8	87	58.3	53.0	650	328	70	180	21.1	3390
OAW4-400F5-04P	560	750	1485	95	87	65.2	59.3	650	367	70	180	22.8	3500

OAW4系列空-水冷高压(6kV、6.6kV)三相异步电动机(IC81W)

OAW4 SERIES AIR-WATER COOLING HIGH VOLTAGE(6kV、6.6kV) THREE-PHASE INDUCTION MOTORS (IC81W)

电机型号 Motor Type	功率 Rated Power		额定转速 Rated Speed	效率 Efficiency	功率因数 Power Factor	电流 Current			转矩 Torque			惯性 Moment of Inertia	重量 Approx WT
						Locked Rotor 6kV	Locked Rotor 6.6kV	Full Load	Full Load	Locked Rotor	Pull Out		
	KW	(HP)	RPM	%	%	A	A	%FLC	Kg-m	%FLT	%FLC	Kg	
OAW4-450F1-04P	630	840	1485	95.2	87	73.2	66.5	650	413	80	180	25.3	3800
OAW4-450F2-04P	710	950	1485	95.4	87	82.3	74.8	650	466	80	180	27.4	3920
OAW4-450F3-04P	800	1070	1485	95.5	87	92.7	84.2	650	525	80	180	29.7	4100
OAW4-450F4-04P	900	1210	1485	95.6	87	104.1	94.7	650	591	80	180	30.6	4250
OAW4-500F1-04P	1000	1340	1485	95.7	87	115.6	105.1	650	656	70	180	45.2	5550
OAW4-500F2-04P	1120	1500	1485	95.8	88	127.8	116.2	650	735	70	180	50.8	5790
OAW4-500F3-04P	1250	1680	1485	96.0	88	142.4	129.4	650	820	60	180	53.4	5980
OAW4-500F4-04P	1400	1880	1485	96.0	88	159.5	145.0	650	919	60	180	58.3	6220
OAW4-560F1-04P	1600	2140	1485	96.1	89	180.0	163.6	650	1050	60	180	75.5	7500
OAW4-560F2-04P	1800	2410	1485	96.2	89	202.3	183.9	650	1181	60	180	80.2	7820
OAW4-560F3-04P	2000	2680	1485	96.4	89	224.3	203.9	650	1312	60	180	85.6	8230
OAW4-630F1-04P	2240	3000	1493	96.5	89	251.0	228.2	650	1462	60	180	126	9770
OAW4-630F2-04P	2500	3350	1493	96.6	89	279.8	254.4	650	1632	60	180	134	10120
OAW4-630F3-04P	2800	3750	1493	96.6	89	313.4	284.9	650	1828	60	180	142	10500
OAW4-355F1-06P	185	250	985	92.4	81	23.8	21.6	600	183	80	180	9.9	2660
OAW4-355F2-06P	200	270	985	93.0	81	25.5	23.2	600	198	80	180	10.8	2740
OAW4-355F3-06P	220	295	985	93.5	82	27.6	25.1	600	218	80	180	11.2	2820
OAW4-355F4-06P	250	335	985	93.7	82	31.3	28.5	600	247	80	180	12.2	2880
OAW4-400F1-06P	280	375	985	93.9	83	34.6	31.4	600	277	80	180	20.2	3150
OAW4-400F2-06P	315	420	985	94.2	83	38.8	35.2	600	312	80	180	21.6	3250
OAW4-400F3-06P	355	475	985	94.4	83	43.6	39.6	600	351	80	180	23.5	3310
OAW4-400F4-06P	400	535	990	94.4	83	49.1	44.7	600	394	80	180	26.2	3520
OAW4-450F1-06P	450	605	990	94.7	84	54.4	49.5	600	443	80	180	32.2	3950
OAW4-450F2-06P	500	670	990	95.0	85	59.6	54.2	600	492	80	180	35.2	4100
OAW4-450F3-06P	560	750	990	95.1	85	66.7	60.6	600	551	70	180	38.8	4280
OAW4-450F4-06P	630	840	990	95.2	85	74.9	68.1	600	620	70	180	42.6	4470
OAW4-500F1-06P	710	950	990	95.4	85	84.3	76.6	600	699	70	180	56.8	5000
OAW4-500F2-06P	800	1070	990	95.5	85	94.8	86.2	600	787	70	180	60.6	5310
OAW4-500F3-06P	900	1210	991	95.6	85	106.6	96.9	650	885	70	180	66.0	5620
OAW4-500F4-06P	1000	1340	991	95.7	85	118.3	107.5	650	983	70	180	72.1	5760
OAW4-560F1-06P	1120	1500	991	95.8	86	130.8	118.9	650	1101	70	180	100	7050
OAW4-560F2-06P	1250	1680	993	96.0	86	145.7	132.4	650	1227	70	180	101	7240
OAW4-560F3-06P	1400	1880	994	96.0	86	163.2	148.3	650	1373	70	180	118	7520
OAW4-630F1-06P	1600	2140	994	96.1	86	186.3	169.4	650	1569	70	180	150	9250
OAW4-630F2-06P	1800	2410	994	96.2	86	209.4	190.3	650	1765	70	180	163	9950

OAW4系列空-水冷高压(6kV、6.6kV)三相异步电动机(IC81W)

OAW4 SERIES AIR-WATER COOLING HIGH VOLTAGE(6kV、6.6kV) THREE-PHASE INDUCTION MOTORS (IC81W)

电机型号 Motor Type	功率 Rated Power		额定转速 Rated Speed	效率 Efficiency	功率因数 Power Factor	电流 Current			转矩 Torque			惯性 Moment of Inertia	重量 Approx WT
						Locked Rotor 6kV	Locked Rotor 6.6kV	Full Load	Full Load	Locked Rotor	Pull Out		
	KW	(HP)	RPM	%	%	A	A	%FLC	Kg-m	%FLT	%FLC	Kg	
OAW4-630F3-06P	2000	2680	994	96.4	86	232.1	211.0	650	1961	70	180	175	9910
OAW4-400F1-08P	185	250	740	92.4	77	25.0	22.7	550	244	80	180	21.6	2990
OAW4-400F2-08P	200	270	740	92.9	78	26.6	24.1	550	263	80	180	23.5	3130
OAW4-400F3-08P	220	295	740	93.4	78	29.1	26.4	550	290	80	180	25.4	3220
OAW4-400F4-08P	250	335	740	93.5	79	32.6	29.6	550	329	80	180	27.3	3350
OAW4-400F5-08P	280	375	740	93.7	79	36.4	33.1	550	369	80	180	29.1	3450
OAW4-450F1-08P	315	420	740	93.9	80	40.4	36.7	550	415	80	180	34.2	3950
OAW4-450F2-08P	355	475	740	94.0	80	45.4	41.3	550	467	80	180	36.5	4190
OAW4-450F3-08P	400	535	740	94.2	80	51.1	46.4	550	527	80	180	38.8	4480
OAW4-450F4-08P	450	605	740	94.3	81	56.7	51.5	550	593	80	180	42.6	4670
OAW4-500F1-08P	500	670	740	94.8	81	62.7	57.0	550	658	80	180	68.2	5180
OAW4-500F2-08P	560	750	740	94.9	82	69.2	63.0	550	737	80	180	75.0	5350
OAW4-500F3-08P	630	840	740	95.0	82	77.8	70.7	600	830	70	180	81.8	5650
OAW4-500F4-08P	710	950	740	95.0	82	87.7	79.7	600	935	70	180	89.4	5780
OAW4-560F1-08P	800	1070	740	95.2	84	96.3	87.5	600	1054	70	180	127	6750
OAW4-560F2-08P	900	1210	744	95.3	84	108.2	98.4	600	1179	70	180	135	7050
OAW4-560F3-08P	1000	1340	744	95.4	84	120.1	109.2	600	1310	70	180	143	7450
OAW4-630F1-08P	1120	1500	744	95.5	84	134.3	122.1	600	1467	70	180	177	8880
OAW4-630F2-08P	1250	1680	744	95.6	84	149.8	136.2	600	1637	70	180	189	9100
OAW4-630F3-08P	1400	1880	744	95.7	84	167.6	152.4	600	1834	70	180	200	9410
OAW4-630F4-08P	1600	2140	744	95.8	84	191.3	173.9	600	2096	70	180	222	9820
OAW4-400F1-10P	185	250	590	91.9	75	25.8	23.5	550	306	80	180	26.9	3440
OAW4-400F2-10P	200	270	590	92.2	76	27.5	25.0	550	330	80	180	29.2	3630
OAW4-450F1-10P	220	295	590	92.8	77	29.6	26.9	550	363	80	180	35.2	4060
OAW4-450F2-10P	250	335	590	92.9	78	33.2	30.2	550	413	80	180	38.0	4190
OAW4-450F3-10P	280	375	590	93.1	78	37.1	33.7	550	462	80	180	41.9	4380
OAW4-450F4-10P	315	420	590	93.3	79	41.1	37.4	550	520	80	180	44.1	4590
OAW4-450F5-10P	355	475	590	93.5	79	46.2	42.0	550	586	80	180	45.3	4800
OAW4-500F1-10P	400	535	590	93.9	80	51.2	46.6	550	661	80	180	59.7	5320
OAW4-500F2-10P	450	605	590	93.9	80	57.6	52.4	550	743	80	180	65.6	5560
OAW4-500F3-10P	500	670	590	94.2	80	63.8	58.0	550	826	80	180	71.5	5660
OAW4-500F4-10P	560	750	590	94.3	80	71.4	64.9	600	925	70	180	78.2	5950
OAW4-500F5-10P	630	840	590	94.4	80	80.3	73.0	600	1041	70	180	84.9	6190
OAW4-560F1-10P	710	950	590	94.5	82	88.2	80.2	600	1173	70	180	135	7000
OAW4-560F2-10P	800	1070	594	94.8	82	99.0	90.0	600	1312	70	180	143	7250

OAW4系列空-水冷高压(6kV、6.6kV)三相异步电动机(IC81W)

OAW4 SERIES AIR-WATER COOLING HIGH VOLTAGE(6kV、6.6kV) THREE-PHASE INDUCTION MOTORS (IC81W)

电机型号 Motor Type	功率 Rated Power		额定转速 Rated Speed	效率 Efficiency	功率因数 Power Factor	电流 Current			转矩 Torque			惯性 Moment of Inertia	重量 Approx WT
						Locked Rotor 6kV	Locked Rotor 6.6kV	Full Load	Full Load	Locked Rotor	Pull Out		
	KW	(HP)	RPM	%	%	A	A	%FLC	Kg-m	%FLT	%FLC	Kg	
OAW4-560F3-10P	900	1210	594	94.9	82	111.3	101.2	600	1476	70	180	153	7630
OAW4-630F1-10P	1000	1340	594	95.0	82	123.5	112.3	600	1641	70	180	196	8930
OAW4-630F2-10P	1120	1500	594	95.1	82	138.2	125.6	600	1837	70	180	205	9300
OAW4-630F3-10P	1250	1680	594	95.4	82	153.8	139.8	600	2051	70	180	224	9800
OAW4-630F4-10P	1400	1880	594	95.5	82	172.0	156.4	600	2297	70	180	231	10500
OAW4-450F1-12P	185	250	490	91.1	72	27.1	24.7	550	368	80	180	34.3	3700
OAW4-450F2-12P	200	270	490	91.5	72	29.2	26.6	550	398	80	180	37.8	3810
OAW4-450F3-12P	220	295	490	92.2	73	31.5	28.6	550	438	80	180	40.8	3980
OAW4-450F4-12P	250	335	490	92.4	73	35.7	32.4	550	497	80	180	43.2	4190
OAW4-500F1-12P	280	375	490	93.3	74	39.0	35.5	550	557	80	180	61.1	5320
OAW4-500F2-12P	315	420	490	93.5	75	43.2	39.3	550	626	80	180	63.8	5490
OAW4-500F3-12P	355	475	490	93.6	75	48.7	44.2	600	706	70	180	66.6	5650
OAW4-500F4-12P	400	535	490	93.9	75	54.7	49.7	600	796	70	180	66.6	5850
OAW4-500F5-12P	450	605	490	93.9	75	61.5	55.9	600	895	70	180	69.3	5890
OAW4-560F1-12P	500	670	490	94.3	79	64.6	58.7	600	994	70	180	129	6600
OAW4-560F2-12P	560	750	494	94.4	79	72.3	65.7	600	1105	70	180	142	7080
OAW4-560F3-12P	630	840	494	94.5	79	81.2	73.8	600	1243	70	180	155	7370
OAW4-630F1-12P	710	950	494	94.5	79	91.5	83.2	600	1401	70	180	202	8570
OAW4-630F2-12P	800	1070	494	94.8	79	102.8	93.4	600	1578	70	180	219	8980
OAW4-630F3-12P	900	1210	494	94.9	79	115.5	105.0	600	1775	70	180	236	9300
OAW4-630F4-12P	1000	1340	494	95.0	79	128.2	116.6	600	1973	70	180	258	9520

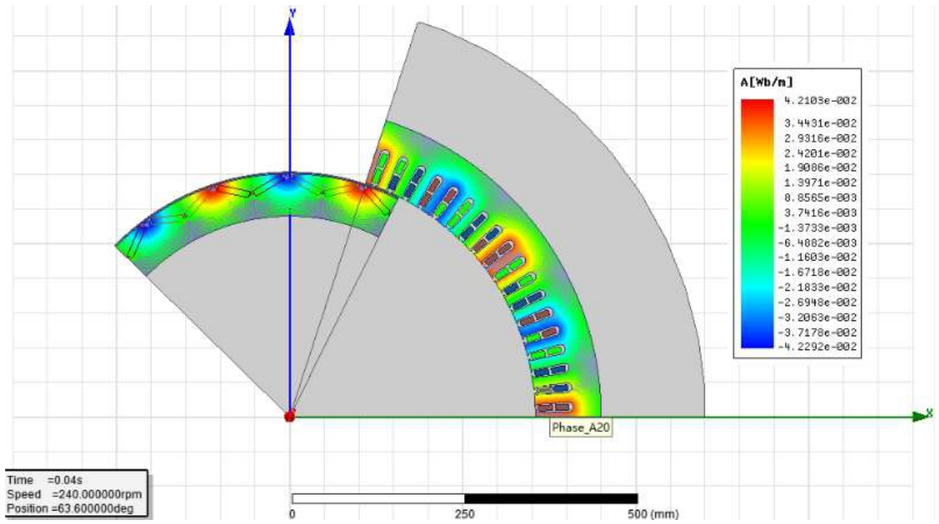

OAW4系列空-水冷高压(10kV、11kV)三相异步电动机(IC81W)

OAW4 SERIES AIR-WATER COOLING HIGH VOLTAGE(10kV、11kV) THREE-PHASE INDUCTION MOTORS (IC81W)

电机型号 Motor Type	功率 Rated Power		额定转速 Rated Speed	效率 Efficiency	功率因数 Power Factor	电流 Current			转矩 Torque			惯性 Moment of Inertia	重量 Approx WT
						Locked Rotor 10kV	Locked Rotor 11kV	Full Load	Full Load	Locked Rotor	Pull Out		
	KW	(HP)	RPM	%	%	A	A	%FLC	Kg-m	%FLT	%FLC	Kg	
OAW4-400F1-02P	220	295	2980	93.3	86	15.8	14.4	750	72	60	180	7.2	2950
OAW4-400F2-02P	250	335	2980	93.4	86	18.0	16.3	750	82	60	180	7.2	2960
OAW4-400F3-02P	280	375	2980	93.6	86	20.1	18.3	750	92	60	180	7.4	3030
OAW4-400F4-02P	315	420	2980	93.9	86	22.5	20.5	750	103	60	180	7.6	3060
OAW4-400F5-02P	355	475	2980	94.3	86	25.3	23.0	700	116	60	180	7.8	3090
OAW4-400F6-02P	400	535	2980	94.5	86	28.4	25.8	700	131	60	180	8.4	3150
OAW4-400F7-02P	450	605	2980	94.7	86	31.9	29.0	700	147	60	180	8.9	3250
OAW4-450F1-02P	500	670	2980	94.9	87	35.0	31.8	700	164	60	180	9.2	3730
OAW4-450F2-02P	560	750	2980	95.0	87	39.1	35.6	700	183	60	180	9.2	3740
OAW4-450F3-02P	630	845	2980	95.0	87	44.0	40.0	700	206	60	180	10.1	3800
OAW4-450F4-02P	710	950	2980	95.1	87	49.5	45.0	700	232	60	180	10.1	3900
OAW4-450F5-02P	800	1070	2980	95.3	87	55.7	50.6	700	262	60	180	11.2	3990
OAW4-500F1-02P	900	1210	2980	95.4	88	61.9	56.3	700	294	60	180	17.0	4780
OAW4-500F2-02P	1000	1340	2980	95.5	88	68.7	62.5	700	327	60	180	18.3	4950
OAW4-500F3-02P	1120	1500	2980	95.6	88	76.9	69.9	700	366	60	180	19.7	5110
OAW4-500F4-02P	1250	1680	2980	95.9	88	85.5	77.7	700	409	60	180	21.6	5360
OAW4-500F5-02P	1400	1880	2980	96.0	88	95.7	87.0	700	458	60	180	23.7	5510
OAW4-560F1-02P	1600	2140	2980	96.0	88	109.3	99.4	700	523	60	180	35.4	6430
OAW4-560F2-02P	1800	2410	2982	96.1	89	121.5	110.5	700	588	60	180	37.5	6940
OAW4-560F3-02P	2000	2680	2982	96.3	89	134.7	122.5	700	654	60	180	39.6	7140
OAW4-630F1-02P	2240	3000	2982	96.4	89	150.7	137.0	700	732	60	180	69	9180
OAW4-630F2-02P	2500	3350	2982	95.5	89	169.8	154.4	700	817	60	180	73	9250
OAW4-630F3-02P	2800	3750	2982	95.5	89	190.2	172.9	700	915	60	180	76	9820
OAW4-630F4-02P	3150	4220	2982	95.6	89	213.8	194.3	700	1029	60	180	80	10090
OAW4-400F1-04P	220	295	1480	93.3	85	16.0	14.6	700	145	70	180	15.7	3010
OAW4-400F2-04P	250	335	1480	93.4	85	18.2	16.5	700	165	70	180	15.7	3050
OAW4-400F3-04P	280	375	1480	93.5	85	20.3	18.5	700	184	70	180	16.5	3200
OAW4-400F4-04P	315	420	1480	93.8	85	22.8	20.7	700	207	70	180	17.1	3270
OAW4-400F5-04P	355	475	1485	93.9	86	25.4	23.1	700	233	70	180	18.4	3380
OAW4-400F6-04P	400	535	1485	94.0	86	28.6	26.0	700	262	70	180	19.8	3460
OAW4-400F7-04P	450	605	1485	94.4	86	32.0	29.1	700	295	70	180	21.7	3590
OAW4-450F1-04P	500	670	1485	94.5	86	35.5	32.3	700	328	70	180	21.3	3790
OAW4-450F2-04P	560	750	1485	94.7	86	39.7	36.1	700	367	70	180	23.0	3880
OAW4-450F3-04P	630	845	1485	94.9	86	44.6	40.5	700	413	70	180	25.3	3950
OAW4-450F4-04P	710	950	1485	95.4	87	49.4	44.9	700	466	70	180	27.4	4050

OAW4系列空-水冷高压(10kV、11kV)三相异步电动机(IC81W)

OAW4 SERIES AIR-WATER COOLING HIGH VOLTAGE (10kV、11kV) THREE-PHASE INDUCTION MOTORS (IC81W)

电机型号 Motor Type	功率 Rated Power		额定转速 Rated Speed	效率 Efficiency	功率因数 Power Factor	电流 Current			转矩 Torque			惯性 Moment of Inertia	重量 Approx WT
						Locked Rotor 6kV	Locked Rotor 6.6kV	Full Load	Full Load	Locked Rotor	Pull Out		
	KW	(HP)	RPM	%	%	A	A	%FLC	Kg-m	%FLT	%FLC	Kg	
OAW4-450F5-04P	800	1070	1485	95.5	87	55.6	50.5	700	525	70	180	29.7	4100
OAW4-500F1-04P	900	1210	1485	95.6	88	61.8	56.2	700	591	70	180	51.7	5050
OAW4-500F2-04P	1000	1340	1485	95.7	88	68.6	62.3	700	656	70	180	55.0	5180
OAW4-500F3-04P	1120	1500	1485	95.8	88	76.7	69.7	700	735	70	180	60.2	5480
OAW4-500F4-04P	1250	1680	1485	96.0	89	84.5	76.8	700	820	70	180	64.8	5920
OAW4-500F5-04P	1400	1880	1485	96.1	89	94.5	85.9	700	919	70	180	69.4	6360
OAW4-560F1-04P	1600	2140	1485	96.2	89	107.9	98.1	700	1050	70	180	98	7310
OAW4-560F2-04P	1800	2410	1492	96.3	89	121.3	110.2	700	1176	70	180	103	7650
OAW4-560F3-04P	2000	2680	1493	96.5	89	134.5	122.2	700	1305	70	180	108	8030
OAW4-630F1-04P	2240	3000	1493	96.6	89	150.4	136.8	700	1462	60	180	149	9520
OAW4-630F2-04P	2500	3350	1493	96.6	89	167.9	152.6	700	1632	60	180	156	9670
OAW4-630F3-04P	2800	3750	1493	96.6	89	188.0	170.9	700	1828	60	180	164	9920
OAW4-630F4-04P	3150	4220	1493	96.7	89	211.3	192.1	700	2056	60	180	172	10100
OAW4-400F1-06P	220	295	990	92.9	80	17.1	15.5	600	217	70	180	21.6	3060
OAW4-400F2-06P	250	335	990	93.0	80	19.4	17.6	600	246	70	180	23.5	3150
OAW4-400F3-06P	280	375	990	93.2	80	21.7	19.7	600	276	70	180	24.4	3250
OAW4-400F4-06P	315	420	990	93.5	82	23.7	21.6	600	310	70	180	25.3	3370
OAW4-450F1-06P	355	475	990	93.7	83	26.4	24.0	600	349	70	180	27.6	3640
OAW4-450F2-06P	400	535	990	93.9	83	29.6	26.9	600	394	70	180	29.4	3740
OAW4-450F3-06P	450	605	990	94.0	83	33.3	30.3	600	443	70	180	32.2	3900
OAW4-450F4-06P	500	670	995	94.5	83	36.8	33.5	600	490	70	180	35.5	4090
OAW4-450F5-06P	560	750	995	94.6	84	40.7	37.0	600	548	70	180	38.8	4180
OAW4-500F1-06P	630	845	995	94.9	84	45.6	41.5	600	617	70	180	52.9	4950
OAW4-500F2-06P	710	950	995	95.0	84	51.4	46.7	600	695	70	180	56.8	5160
OAW4-500F3-06P	800	1070	995	95.2	84	57.8	52.5	600	784	70	180	60.6	5210
OAW4-500F4-06P	900	1210	990	95.4	85	64.1	58.3	600	886	70	180	66.0	5340
OAW4-500F5-06P	1000	1340	990	95.5	85	71.1	64.7	600	984	70	180	72.1	5460
OAW4-560F1-06P	1120	1500	990	95.7	85	79.5	72.3	600	1102	70	180	105	6370
OAW4-560F2-06P	1250	1680	990	95.9	86	87.5	79.6	600	1230	70	180	115	6550
OAW4-560F3-06P	1400	1880	995	96.1	86	97.8	88.9	600	1371	70	180	128	6920
OAW4-560F4-06P	1600	2140	995	96.2	86	111.7	101.5	600	1567	70	180	135	7300
OAW4-630F1-06P	1800	2410	995	96.2	86	125.6	114.2	600	1763	60	180	169	9070
OAW4-630F2-06P	2000	2680	995	96.3	86	139.4	126.8	600	1959	60	180	178	9220
OAW4-630F3-06P	2240	3000	995	96.3	86	156.2	142.0	600	2194	60	180	191	9530
OAW4-630F4-06P	2500	3350	995	96.3	86	174.3	158.4	600	2448	60	180	206	9970

OAW4系列空-水冷高压(10kV、11kV)三相异步电动机(IC81W)

OAW4 SERIES AIR-WATER COOLING HIGH VOLTAGE (10kV、11kV) THREE-PHASE INDUCTION MOTORS (IC81W)

电机型号 Motor Type	功率 Rated Power		额定转速 Rated Speed	效率 Efficiency	功率因数 Power Factor	电流 Current			转矩 Torque			惯性 Moment of Inertia	重量 Approx WT
						Locked Rotor 10kV	Locked Rotor 11kV	Full Load	Full Load	Locked Rotor	Pull Out		
	KW	(HP)	RPM	%	%	A	A	%FLC	Kg-m	%FLT	%FLC	Kg	
OAW4-450F1-08P	220	295	740	92.6	76	18.0	16.4	600	290	70	180	26.5	3640
OAW4-450F2-08P	250	335	740	92.8	76	20.5	18.6	600	329	70	180	27.3	3740
OAW4-450F3-08P	280	375	740	93.0	76	22.9	20.8	600	369	70	180	28.2	3900
OAW4-450F4-08P	315	420	740	93.5	77	25.3	23.0	600	415	70	180	30.5	4090
OAW4-450F5-08P	355	475	740	93.7	77	28.4	25.8	600	467	70	180	32.8	4280
OAW4-500F1-08P	400	535	740	93.8	78	31.6	28.7	600	527	70	180	55.7	4650
OAW4-500F2-08P	450	605	740	93.9	78	35.5	32.2	600	593	70	180	62.4	4800
OAW4-500F3-08P	500	670	740	94.4	79	38.7	35.2	600	658	70	180	68.2	5050
OAW4-500F4-08P	560	750	740	94.5	79	43.3	39.4	600	737	70	180	75.0	5340
OAW4-500F5-08P	630	845	740	94.9	82	46.7	42.5	600	830	70	180	78.8	5590
OAW4-500F6-08P	710	950	740	95.0	82	52.6	47.8	600	935	70	180	82.4	5780
OAW4-560F1-08P	800	1070	740	95.2	82	59.2	53.8	600	1054	70	180	155	6850
OAW4-560F2-08P	900	1210	740	95.3	82	66.5	60.4	600	1185	70	180	162	7050
OAW4-560F3-08P	1000	1340	744	95.5	83	72.8	66.2	600	1310	70	180	171	7350
OAW4-560F4-08P	1120	1500	744	95.6	83	81.5	74.1	600	1467	70	180	179	7660
OAW4-630F1-08P	1250	1680	745	95.8	83	90.8	82.5	600	1635	70	180	229	8700
OAW4-630F2-08P	1400	1880	745	95.8	83	101.7	92.4	600	1831	70	180	240	8910
OAW4-630F3-08P	1600	2140	745	95.8	83	116.2	105.6	600	2093	70	180	252	9220
OAW4-630F4-08P	1800	2410	745	95.8	83	130.7	118.8	600	2354	70	180	263	9530
OAW4-450F1-10P	220	295	595	92.5	72	19.1	17.3	550	360	70	180	32.2	3760
OAW4-450F2-10P	250	335	595	92.7	73	21.3	19.4	550	409	70	180	36.0	3990
OAW4-500F1-10P	280	375	595	93.1	74	23.5	21.3	550	459	70	180	47.6	4810
OAW4-500F2-10P	315	420	595	93.4	74	26.3	23.9	550	516	70	180	52.7	5020
OAW4-500F3-10P	355	475	595	93.5	75	29.2	26.6	550	581	70	180	57.6	5160
OAW4-500F4-10P	400	535	595	93.6	75	32.9	29.9	550	655	70	180	63.5	5250
OAW4-500F5-10P	450	605	590	93.8	77	36.0	32.7	600	743	70	180	69.2	5480
OAW4-500F6-10P	500	670	590	94.0	77	39.9	36.3	600	826	70	180	76.9	5650
OAW4-560F1-10P	560	750	590	94.1	78	44.1	40.0	600	925	70	180	131	6310
OAW4-560F2-10P	630	845	590	94.3	78	49.5	45.0	600	1041	70	180	139	6610
OAW4-560F3-10P	710	950	590	94.5	78	55.6	50.6	600	1173	70	180	155	6910
OAW4-560F4-10P	800	1070	594	94.9	80	60.8	55.3	600	1312	70	180	163	7120
OAW4-560F5-10P	900	1210	593	95.1	80	68.3	62.1	600	1479	70	180	171	7450
OAW4-630F1-10P	1000	1340	593	95.1	80	75.9	69.0	600	1643	70	180	207	8360
OAW4-630F2-10P	1120	1500	593	95.2	80	84.9	77.2	600	1841	70	180	225	8680
OAW4-630F3-10P	1250	1680	593	95.3	80	94.7	86.1	600	2054	70	180	244	8900

OAW4系列空-水冷高压(10kV、11kV)三相异步电动机(IC81W)

OAW4 SERIES AIR-WATER COOLING HIGH VOLTAGE (10kV、11kV) THREE-PHASE INDUCTION MOTORS (IC81W)

电机型号 Motor Type	功率 Rated Power		额定转速 Rated Speed	效率 Efficiency	功率因数 Power Factor	电流 Current			转矩 Torque			惯性 Moment of Inertia	重量 Approx WT
						Locked Rotor 10kV	Locked Rotor 11kV	Full Load	Full Load	Locked Rotor	Pull Out		
	KW	(HP)	RPM	%	%	A	A	%FLC	Kg-m	%FLT	%FLC	Kg	
OAW4-630F4-10P	1400	1880	593	95.3	80	106.0	96.4	600	2301	70	180	264	9310
OAW4-630F5-10P	1600	2140	593	95.3	80	121.2	110.2	600	2629	70	180	281	9730
OAW4-500F1-12P	220	295	490	92.4	72	19.1	17.4	550	438	70	180	58.3	5210
OAW4-500F2-12P	250	335	490	92.6	72	21.6	19.7	550	497	70	180	61.1	5270
OAW4-500F3-12P	280	375	490	92.8	72	24.2	22.0	550	557	70	180	63.8	5340
OAW4-500F4-12P	315	420	490	93.1	73	26.8	24.3	550	626	70	180	66.6	5550
OAW4-500F5-12P	355	475	490	93.2	73	30.1	27.4	550	706	70	180	69.3	5760
OAW4-560F1-12P	400	535	490	93.4	74	33.4	30.4	600	796	70	180	143	6710
OAW4-560F2-12P	450	605	490	93.5	74	37.6	34.1	600	895	70	180	151	6610
OAW4-560F3-12P	500	670	490	93.9	75	41.0	37.3	600	994	70	180	159	6810
OAW4-560F4-12P	560	750	492	94.1	75	45.8	41.6	600	1109	70	180	167	7000
OAW4-560F5-12P	630	845	493	94.3	75	51.4	46.8	600	1245	70	180	175	7400
OAW4-630F1-12P	710	950	493	94.5	76	57.1	51.9	600	1403	70	180	202	8150
OAW4-630F2-12P	800	1070	492	94.8	76	64.1	58.3	600	1585	70	180	222	8570
OAW4-630F3-12P	900	1210	492	94.8	77	71.2	64.7	600	1783	70	180	239	8780
OAW4-630F4-12P	1000	1340	492	94.8	77	79.1	71.9	600	1981	70	180	256	9000
OAW4-630F5-12P	1120	1500	492	94.8	77	88.6	80.5	600	2218	70	180	276	9620

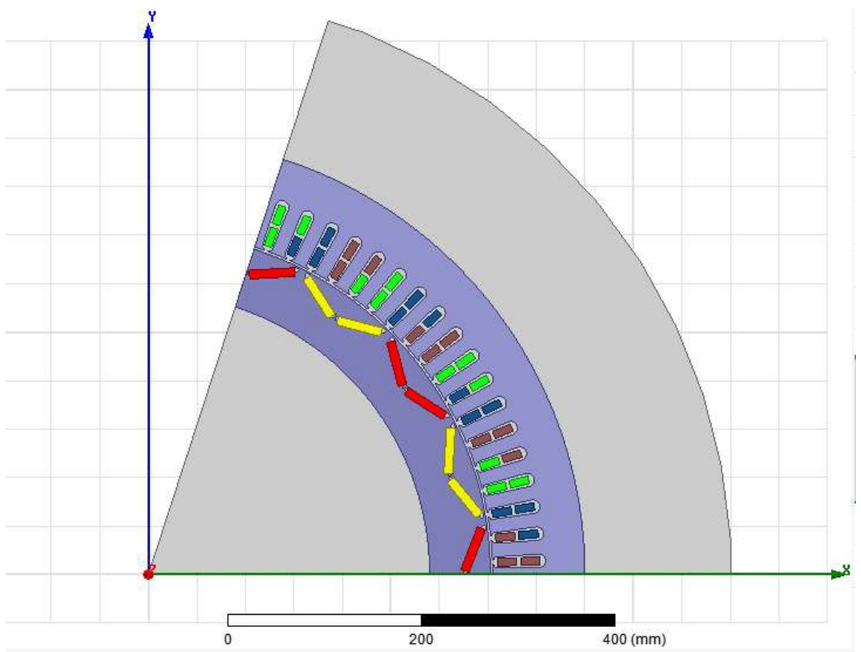

OAW3、OAW4系列空-水冷高压(6kV、6.6kV)三相异步电动机(IC81W)

OAW3、OAW4 SERIES AIR-WATER COOLING HIGH VOLTAGE(6kV、6.6kV) THREE-PHASE INDUCTION MOTORS (IC81W)

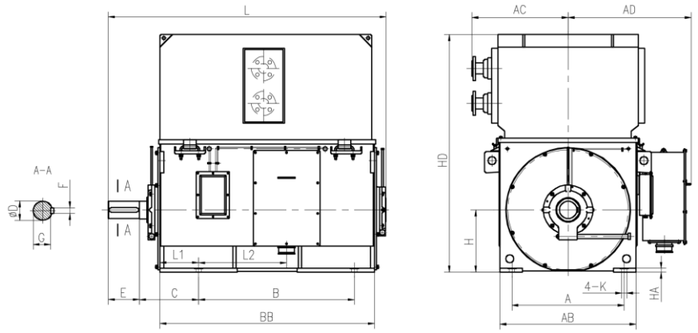

机座号 Frame	极数 Poles	安装尺寸 Installation Dimensions												
		A	B	C	D		E	F		G		H		K	
355	2	630±1.75	900±1.75	315±4	80	+0.030 +0.011	170±0.5	22	0 -0.052	71	0 -0.2	355	0 -1	28	+0.62 0
355	4～6	630±1.75	900±1.75	315±4	100	+0.035 +0.013	210±0.5	28	0 -0.052	90	0 -0.2	355	0 -1	28	+0.62 0
400	2	710±1.75	1000±1.75	375±4	90	+0.035 +0.013	170±0.5	25	0 -0.052	81	0 -0.2	400	0 -1	35	+0.62 0
400	4～8	710±1.75	1000±1.75	335±4	110	+0.035 +0.013	210±0.57	28	0 -0.052	100	0 -0.2	400	0 -1	35	+0.62 0
450	2	800±1.75	1120±1.75	400±4	100	+0.035 +0.013	210±0.57	28	0 -0.052	90	0 -0.2	450	0 -1	35	+0.62 0
450	4	800±1.75	1120±1.75	355±4	120	+0.035 +0.013	210±0.57	32	0 -0.062	109	0 -0.2	450	0 -1	35	+0.62 0
450	6～12	800±1.75	1120±1.75	355±4	130	+0.040 +0.015	250±0.57	32	0 -0.062	119	0 -0.2	450	0 -1	35	+0.62 0
500	2	900±2.1	1250±2.1	560±4	110	+0.035 +0.013	210±0.57	28	0 -0.052	100	0 -0.2	500	0 -1	42	+0.62 0
500	4	900±2.1	1250±2.1	475±4	130	+0.04 +0.015	250±0.57	32	0 -0.062	119	0 -0.2	500	0 -1	42	+0.62 0
500	6～10	900±2.1	1250±2.1	475±4	140	+0.04 +0.015	250±0.57	36	0 -0.062	128	0 -0.3	500	0 -1	42	+0.62 0
560	2	1000±2.1	1400±2.1	560±4	130	+0.04 +0.015	250±0.57	32	0 -0.062	119	0 -0.2	560	0 -1	42	+0.62 0
560	4	1000±2.1	1400±2.1	500±4	150	+0.04 +0.015	250±0.57	36	0 -0.062	138	0 -0.3	560	0 -1	42	+0.62 0
560	6～12	1000±2.1	1400±2.1	500±4	160	+0.04 +0.015	300±0.65	40	0 -0.062	147	0 -0.3	560	0 -1	42	+0.62 0
630	2	1120±2.1	1600±2.1	560±4	140	+0.04 +0.015	250±0.57	36	0 -0.062	128	0 -0.3	630	0 -1	48	+0.62 0
630	4	1120±2.1	1600±2.1	530±4	170	+0.04 +0.015	300±0.65	40	0 -0.062	157	0 -0.3	630	0 -1	48	+0.62 0
630	6～12	1120±2.1	1600±2.1	530±4	180	+0.04 +0.015	300±0.65	45	0 -0.062	165	0 -0.3	630	0 -1	48	+0.62 0

OAW3、OAW4系列空-水冷高压(6kV、6.6kV)三相异步电动机(IC81W)

OAW3、OAW4 SERIES AIR-WATER COOLING HIGH VOLTAGE (6kV、6.6kV) THREE-PHASE INDUCTION MOTORS (IC81W)

机座号 Frame	极数 Poles	安装尺寸 Installation Dimensions								
		AC	AD	AB	BB	HA	HD	L1	L2	L
355	2	550	550	768	1350	30	1400	190	610	1725
355	4～6	550	550	768	1400	25	1400	190	610	1815
400	2	620	620	888	1450	36	1465	250	550	1830
400	4～6	620	620	888	1510	30	1465	210	620	2000
450	2	650	650	888	1530	40	1650	280	625	1960
450	4	650	650	968	1638	32	1650	220	740	2090
450	6～12	650	650	968	1638	32	1650	220	740	2130
500	2	720	720	1092	1720	50	1810	310	670	2350
500	4	720	720	1092	1720	35	1810	310	670	2260
500	6～12	720	720	1092	1720	35	1810	310	670	2260
560	2	800	800	1196	1938	55	2120	270	810	2650
560	4	800	800	1196	1938	45	2120	320	760	2500
560	6～12	800	800	1196	1938	45	2120	320	760	2550
630	2	880	880	1376	2080	55	2155	265	920	2790
630	4～12	880	880	1376	2120	50	2155	365	820	2730

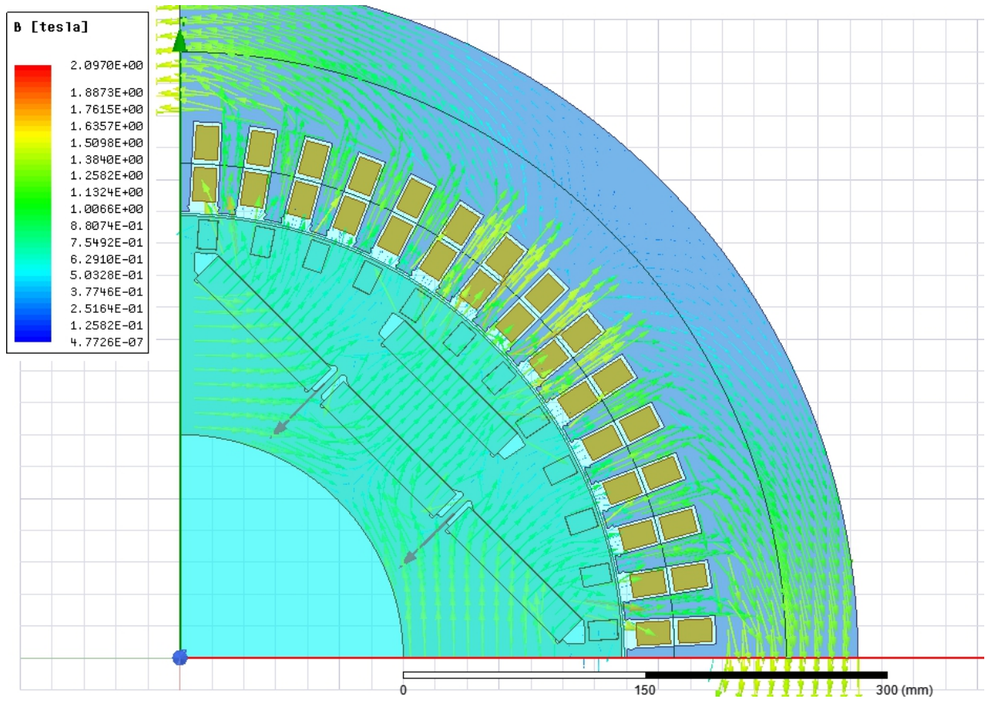

OAW3、OAW4系列空-水冷高压(10kV、11kV)三相异步电动机(IC81W)

OAW3、OAW4 SERIES AIR-WATER COOLING HIGH VOLTAGE (10kV、11kV) THREE-PHASE INDUCTION MOTORS (IC81W)

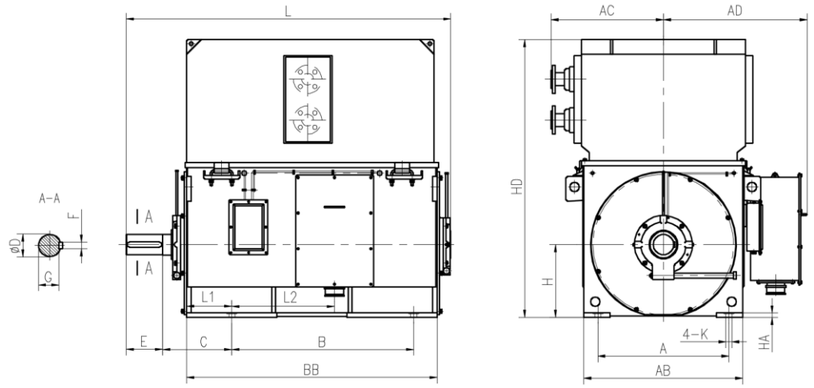

机座号 Frame	极数 Poles	安装尺寸 Installation Dimensions													
		A	B	C	D		E	F		G		H		K	
400	2	710±1.75	1000±1.75	375±4	90	+0.030 +0.011	170±0.5	25	0 -0.052	81	0 -0.2	400	0 -1	35	+0.62 0
400	4～8	710±1.75	1000±1.75	335±4	110	+0.035 +0.013	210±0.57	28	0 -0.052	100	0 -0.2	400	0 -1	35	+0.62 0
450	2	800±1.75	1120±1.75	400±4	90	+0.035 +0.013	170±0.57	25	0 -0.052	81	0 -0.2	450	0 -1	35	+0.62 0
450	4～8	800±1.75	1120±1.75	355±4	110	+0.035 +0.013	210±0.57	28	0 -0.062	100	0 -0.2	450	0 -1	35	+0.62 0
500	2	900±2.1	1250±2.1	560±4	100	+0.035 +0.013	210±0.57	28	0 -0.052	90	0 -0.2	500	0 -1	42	+0.62 0
500	4	900±2.1	1250±2.1	475±4	130	+0.04 +0.015	250±0.57	32	0 -0.062	119	0 -0.2	500	0 -1	42	+0.62 0
500	6～10	900±2.1	1250±2.1	475±4	130	+0.04 +0.015	250±0.57	32	0 -0.062	119	0 -0.3	500	0 -1	42	+0.62 0
560	2	1000±2.1	1400±2.1	560±4	130	+0.04 +0.015	250±0.57	32	0 -0.062	119	0 -0.2	560	0 -1	42	+0.62 0
560	4	1000±2.1	1400±2.1	500±4	150	+0.04 +0.015	250±0.57	36	0 -0.062	138	0 -0.3	560	0 -1	42	+0.62 0
560	6～12	1000±2.1	1400±2.1	500±4	160	+0.04 +0.015	300±0.65	40	0 -0.062	147	0 -0.3	560	0 -1	42	+0.62 0
630	2	1120±2.1	1600±2.1	560±4	140	+0.04 +0.015	250±0.57	36	0 -0.062	128	0 -0.3	630	0 -1	48	+0.62 0
630	4	1120±2.1	1600±2.1	530±4	170	+0.04 +0.015	300±0.65	40	0 -0.062	157	0 -0.3	630	0 -1	48	+0.62 0
630	6～12	1120±2.1	1600±2.1	530±4	180	+0.04 +0.015	300±0.65	45	0 -0.062	165	0 -0.3	630	0 -1	48	+0.62 0

OAW3、OAW4系列空-水冷高压三相异步电动机(IC81W)

OAW3、OAW4 SERIES AIR-WATER COOLING HIGH VOLTAGE THREE-PHASE INDUCTION MOTORS (IC81W)

机座号 Frame	极数 Poles	安装尺寸 Installation Dimensions								
		AC	AD	AB	BB	HA	HD	L1	L2	L
400	2	620	620	888	1450	36	1455	250	550	550
400	4～6	620	620	888	1510	30	1455	210	620	620
450	2	650	650	888	1530	40	1650	280	625	625
450	4	650	650	968	1638	32	1650	220	740	740
450	6～12	650	650	968	1638	32	1650	220	740	740
500	2	720	720	1092	1720	50	1805	310	670	670
500	4	720	720	1092	1720	35	1805	310	670	670
500	6～12	720	720	1092	1720	35	1805	310	670	670
560	2	800	800	1196	1938	55	2120	270	810	810
560	4	800	800	1196	1938	45	2120	320	760	760
560	6～12	800	800	1196	1938	45	2120	320	760	760
630	2	880	880	1376	2080	55	2155	265	920	920
630	4～12	880	880	1376	2120	50	2155	365	820	820

OAW3系列大型空-水冷高压三相异步电动机(IC81W)

OAW3 SERIES LARGE SIZE AIR-WATER COOLING HIGH VOLTAGE THREE-PHASE INDUCTION MOTORS

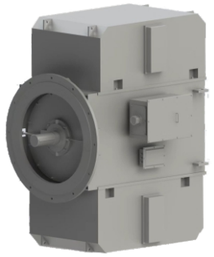

功率范围（Power）：710-10000KW；
机座范围（Frame）：H710-900。

基本技术要求及特点

- 防护等级：IP55
- 冷却方式：IC81W(可派生IC86W)
- 安装形式：B3 (可派生V10)
- 绝缘等级：F级，温升按B级考核；
- 工作制：S1
- 电压等级：6000V,10000V（可派生客户指定的电压）；
- 频率：50Hz（可派生60Hz或指定频率）；
- 功率范围：710-10000kW；
- 同步转速1500、1000、750、600、500、375rpm（可派生客户指定的转速）；
- 电动机符合GB/T13957《大型三相异步电动机基本系列技术条件》标准要求。

使用环境

- 海拔不超过 1000m（可派生指定海拔高度使用的环境）
- 空气温度：0℃至+40℃
- 空气湿度：月平均最高相对湿度为90%，同时月平均温度不高于25℃；
- 环境场所：无可燃气体、无粉尘场所（可派生适应户外
- 环境用"W"型，湿热带环境用"TH"型,户外湿热带环境用"WTH"型，户外中度防腐"WF1"型等）。

电源

- 允许电压波动±5%，频率波动±2%，电压和频率合并波动±5%。

结构

- 电动机采用钢板焊接结构，美观大方；
- 电动机设置不停机注排油装置；
- 电动机设置轴承测温pt100；绕组测温pt100等附件；
- 采用优质进口的滚动轴承结构，维修、安装方便；
- 转子采用铜笼结构，损耗小，可靠性高。
- 定子绕组经VPI处理，具有良好的电气性能和防潮能力。

Technical characteristics

- Protection class: IP55;
- Cooling method: IC81W, (IC86W can be derived);
- Installation form: B3 (V10 can be derived);
- Insulation class: F class, temperature rise is assessed according to B class;
- Working system: S1;
- Voltage class: 6000V, 10000V; (customer-specified voltage can be derived);
- Frequency: 50Hz (60Hz can be derived, or specified frequency);
- Power range: 710-10000kW;
- Synchronous speed: 1500, 1000, 750, 600, 500, 375rpm (customer-specified speed can be derived);
- The motor meets the requirements of GB/T13957 "Technical Conditions for Basic Series of Large Three-phase Asynchronous Motors".

Environment

- The altitude does not exceed 1000m (the environment for use at the specified altitude can be derived);
- Ambient air temperature: 0°C to +40°C;
- Ambient air humidity: the monthly average maximum relative humidity is 90%, and the monthly average temperature is not higher than 25℃;
- Environmental place: no flammable gas, no dust place ("W" type for outdoor environment, "TH" type for outdoor humid tropical environment, "WTH" type for outdoor humid tropical environment, "WF1" type for outdoor moderate anti-corrosion Wait).

Power supply

- Allowable voltage fluctuation ±5%, frequency fluctuation ±2%, combined voltage and frequency fluctuation ±5%.

Structure

- The motor adopts steel plate welding structure, which is beautiful and elegant;
- The motor is equipped with a non-stop oil injection and discharge device;
- Motor set bearing temperature measurement pt100; winding temperature measurement pt100 and other accessories;
- Adopt high-quality imported rolling bearing structure (or domestic high-quality sliding), easy maintenance and installation;
- The rotor adopts copper cage structure, with low loss and high reliability;
- The stator winding is treated with VPI and has good electrical performance and moisture resistance.

OAW3系列大型空-水冷高压(6kV)三相异步电动机(IC81W)

OAW3 SERIES LARGE SIZE AIR-WATER COOLING HIGH VOLTAGE (6kV) THREE-PHASE INDUCTION MOTORS (IC81W)

电机型号 Motor Type	功率 Rated Power		额定转速 Rated Speed	效率 Efficiency	功率因数 Power Factor	电流 Current			转矩 Torque			重量 Approx WT
						Full Load	Locked Rotor	Locked Rotor	Full Load	Locked Rotor	Pull Out	
	KW	(HP)	RPM	%	%	A	A	%FLC	Kg-m	%FLT	%FLC	Kg
OAW3-710F1-04P	4000	5330	1492	96.4	87.0	458.9	2983	650	2613	50	180	12900
OAW3-710F2-04P	4500	6000	1492	96.4	87.0	516.3	3356	650	2939	50	180	13500
OAW3-710F3-04P	5000	6670	1492	96.5	88.0	566.6	3683	650	3266	50	180	14100
OAW3-800F1-04P	5600	7470	1493	96.5	88.0	634.6	4125	650	3655	50	180	17400
OAW3-800F2-04P	6300	8400	1493	96.6	88.0	713.2	4635	650	4112	50	180	18200
OAW3-800F3-04P	7100	9470	1493	96.7	88.0	802.9	5219	650	4634	50	180	18900
OAW3-900F1-04P	8000	10700	1494	96.8	88.0	903.7	5874	650	5218	50	180	22800
OAW3-900F2-04P	9000	12000	1494	96.9	88.0	1015.6	6602	650	5870	50	180	23800
OAW3-900F3-04P	10000	13300	1494	97.0	88.0	1127.3	7328	650	6523	50	180	24800
OAW3-710F1-06P	2800	3730	994	96.1	86.0	326.0	2119	650	2745	60	180	12000
OAW3-710F2-06P	3150	4200	994	96.2	86.0	366.4	2382	650	3088	60	180	12600
OAW3-710F3-06P	3550	4760	994	96.2	86.0	412.9	2684	650	3480	60	180	13100
OAW3-710F4-06P	4000	5330	994	96.3	86.0	464.8	3021	650	3921	60	180	13600
OAW3-800F1-06P	4500	6000	994	96.3	86.0	522.9	3399	650	4412	60	180	16800
OAW3-800F2-06P	5000	6670	994	96.4	86.0	580.4	3772	650	4902	60	180	17500
OAW3-800F3-06P	5600	7470	994	96.4	87.0	642.5	4176	650	5490	60	180	18200
OAW3-900F1-06P	6300	8400	994	96.5	87.0	722.1	4694	650	6176	60	180	22000
OAW3-900F2-06P	7100	9470	994	96.6	87.0	812.9	5284	650	6961	60	180	22900
OAW3-900F3-06P	8000	10700	994	96.7	87.0	915.1	5948	650	7843	60	180	23800
OAW3-710F1-08P	2240	3000	740	95.6	85.0	265.3	1724	650	2950	60	180	12000
OAW3-710F2-08P	2500	3330	740	95.7	85.0	295.7	1922	650	3292	60	180	12600
OAW3-710F3-08P	2800	3730	740	95.8	85.0	330.9	2151	650	3687	60	180	13100
OAW3-800F1-08P	3150	4200	740	95.8	85.0	372.2	2420	650	4148	60	180	16300
OAW3-800F2-08P	3550	4760	740	95.9	85.0	419.1	2724	650	4675	60	180	17000
OAW3-800F3-08P	4000	5330	740	96.0	86.0	466.2	3030	650	5268	60	180	17700
OAW3-900F1-08P	4500	6000	740	96.1	86.0	524.0	3406	650	5926	60	180	21000
OAW3-900F2-08P	5000	6670	740	96.2	86.0	581.6	3780	650	6584	60	180	21900
OAW3-900F3-08P	5600	7470	740	96.2	86.0	651.4	4234	650	7375	60	180	22700

OAW3系列大型空-水冷高压(6kV)三相异步电动机(IC81W)

OAW3 SERIES LARGE SIZE AIR-WATER COOLING HIGH VOLTAGE (6kV) THREE-PHASE INDUCTION MOTORS (IC81W)

电机型号 Motor Type	功率 Rated Power		额定转速 Rated Speed	效率 Efficiency	功率因数 Power Factor	电流 Current			转矩 Torque			重量 Approx WT
						Full Load	Locked Rotor	Locked Rotor	Full Load	Locked Rotor	Pull Out	
	KW	(HP)	RPM	%	%	A	A	%FLC	Kg-m	%FLT	%FLC	Kg
OAW3-710F1-10P	2000	2670	595	95.2	83.0	243.6	1461	600	3276	60	180	12400
OAW3-710F2-10P	2240	3000	595	95.3	83.0	272.5	1635	600	3669	60	180	12900
OAW3-800F1-10P	2500	3330	595	95.4	83.0	303.8	1823	600	4094	60	180	16100
OAW3-800F2-10P	2800	3730	595	95.5	83.0	339.9	2040	600	4586	60	180	16800
OAW3-800F3-10P	3150	4200	595	95.6	84.0	377.5	2265	600	5159	60	180	17400
OAW3-900F1-10P	3550	4760	595	95.7	84.0	425.0	2550	600	5814	60	180	21000
OAW3-900F2-10P	4000	5330	595	95.8	84.0	478.3	2870	600	6551	60	180	21900
OAW3-900F3-10P	4500	6000	595	95.8	84.0	538.1	3229	600	7370	60	180	22700
OAW3-900F4-10P	5000	6670	595	95.9	84.0	597.3	3584	600	8189	60	180	23500
OAW3-710F1-12P	1400	1870	495	94.7	79.0	180.1	1080	600	2756	60	180	11700
OAW3-710F2-12P	1600	2130	495	94.7	80.0	203.2	1219	600	3150	60	180	12200
OAW3-710F3-12P	1800	2400	495	94.8	80.0	228.4	1370	600	3544	60	180	12600
OAW3-800F1-12P	2000	2670	495	94.9	80.0	253.5	1521	600	3937	60	180	15700
OAW3-800F2-12P	2240	3000	495	95.0	80.0	283.6	1702	600	4410	60	180	16300
OAW3-800F3-12P	2500	3330	495	95.2	81.0	312.0	1872	600	4922	60	180	16900
OAW3-900F1-12P	2800	3730	495	95.3	81.0	349.0	2094	600	5512	60	180	20600
OAW3-900F1-12P	3150	4200	495	95.4	81.0	392.3	2354	600	6201	60	180	21400
OAW3-900F3-12P	3550	4760	495	95.5	81.0	441.6	2650	600	6989	60	180	22200
OAW3-710F1-16P	800	1070	370	93.4	73.0	112.9	677	600	2107	60	180	11000
OAW3-710F2-16P	900	1200	370	93.5	73.0	126.9	761	600	2370	60	180	11100
OAW3-710F3-16P	1000	1330	370	93.6	74.0	138.9	834	600	2634	60	180	11400
OAW3-710F4-16P	1120	1490	370	93.7	74.0	155.4	933	600	2950	60	180	11900
OAW3-800F1-16P	1250	1670	370	93.8	74.0	173.3	1040	600	3292	60	180	15700
OAW3-800F2-16P	1400	1870	370	93.9	74.0	193.9	1163	600	3687	60	180	16300
OAW3-800F3-16P	1600	2130	370	94.0	75.0	218.4	1310	600	4214	60	180	16900
OAW3-900F1-16P	1800	2400	370	94.1	75.0	245.4	1473	600	4741	60	180	19300
OAW3-900F2-16P	2000	2670	370	94.2	75.0	272.4	1634	600	5268	60	180	19700
OAW3-900F3-16P	2240	3000	370	94.3	75.0	304.8	1829	600	5900	60	180	20100
OAW3-900F4-16P	2500	3330	370	94.4	75.0	339.8	2039	600	6584	60	180	20900

OAW3系列大型空-水冷高压(10kV)三相异步电动机(IC81W)

OAW3 SERIES LARGE SIZE AIR-WATER COOLING HIGH VOLTAGE (10kV) THREE-PHASE INDUCTION MOTORS (IC81W)

电机型号 Motor Type	功率 Rated Power		额定转速 Rated Speed	效率 Efficiency	功率因数 Power Factor	电流 Current			转矩 Torque			重量 Approx WT
						Full Load	Locked Rotor	Locked Rotor	Full Load	Locked Rotor	Pull Out	
	KW	(HP)	RPM	%	%	A	A	%FLC	Kg-m	%FLT	%FLC	Kg
OAW3-710F1-04P	3550	4730	1488	96.1	86.0	248.0	1612	650	2325	60	180	12900
OAW3-710F2-04P	4000	5330	1488	96.2	87.0	275.9	1794	650	2620	60	180	13500
OAW3-710F3-04P	4500	6000	1488	96.2	87.0	310.4	2018	650	2947	60	180	14100
OAW3-800F1-04P	5000	6670	1488	96.3	87.0	344.6	2240	650	3274	60	180	17400
OAW3-800F2-04P	5600	7470	1488	96.3	87.0	385.9	2508	650	3667	60	180	18200
OAW3-800F3-04P	6300	8400	1488	96.4	87.0	433.7	2819	650	4126	60	180	18900
OAW3-900F1-04P	7100	9470	1488	96.5	87.0	488.3	3174	650	4650	60	180	22800
OAW3-900F2-04P	8000	10700	1488	96.6	87.0	549.6	3572	650	5239	60	180	23800
OAW3-900F3-04P	9000	12000	1488	96.7	87.0	617.7	4015	650	5894	60	180	24800
OAW3-710F1-06P	2800	3730	993	95.8	84.0	200.9	1306	650	2748	60	180	12700
OAW3-710F2-06P	3150	4200	993	95.9	84.0	225.8	1468	650	3091	60	180	13200
OAW3-710F3-06P	3550	4730	993	96.0	84.0	254.2	1652	650	3484	60	180	13800
OAW3-800F1-06P	4000	5330	993	96.1	84.0	286.1	1860	650	3925	60	180	16800
OAW3-800F2-06P	4500	6000	993	96.1	84.0	321.9	2092	650	4416	60	180	17500
OAW3-800F3-06P	5000	6670	993	96.2	84.0	357.2	2322	650	4907	60	180	18200
OAW3-900F1-06P	5600	7470	993	96.2	86.0	390.8	2540	650	5496	60	180	19800
OAW3-900F2-06P	6300	8400	993	96.3	86.0	439.2	2855	650	6183	60	180	20700
OAW3-900F3-06P	7100	9470	993	96.4	86.0	494.5	3214	650	6968	60	180	21600
OAW3-900F4-06P	8000	10700	993	96.5	86.0	556.6	3618	650	7851	60	180	22500
OAW3-710F1-08P	2000	2670	740	95.2	85.0	142.7	928	650	2634	60	180	12000
OAW3-710F2-08P	2240	3000	740	95.3	85.0	159.7	1038	650	2950	60	180	12600
OAW3-710F3-08P	2500	3330	740	95.4	85.0	178.0	1157	650	3292	60	180	13100
OAW3-800F1-08P	2800	3730	740	95.5	85.0	199.2	1294	650	3687	60	180	16300
OAW3-800F2-08P	3150	4200	740	95.6	85.0	223.8	1455	650	4148	60	180	17000
OAW3-800F3-08P	3550	4760	740	95.7	85.0	252.0	1638	650	4675	60	180	17700
OAW3-900F1-08P	4000	5330	740	95.8	86.0	280.3	1822	650	5268	60	180	21000
OAW3-900F2-08P	4500	6000	740	95.9	86.0	315.0	2048	650	5926	60	180	21900
OAW3-900F3-08P	5000	6670	740	96.0	86.0	349.7	2273	650	6584	60	180	22700

OAW3系列大型空-水冷高压(10kV)三相异步电动机(IC81W)

OAW3 SERIES LARGE SIZE AIR-WATER COOLING HIGH VOLTAGE (10kV) THREE-PHASE INDUCTION MOTORS (IC81W)

电机型号 Motor Type	功率 Rated Power		额定转速 Rated Speed	效率 Efficiency	功率因数 Power Factor	电流 Current			转矩 Torque			重量 Approx WT
						Full Load	Locked Rotor	Locked Rotor	Full Load	Locked Rotor	Pull Out	
	KW	(HP)	RPM	%	%	A	A	%FLC	Kg-m	%FLT	%FLC	Kg
OAW3-710F1-10P	1800	2400	595	94.8	82.0	133.7	802	600	2948	60	180	12400
OAW3-710F2-10P	2000	2670	595	94.9	82.0	148.4	890	600	3276	60	180	12900
OAW3-800F1-10P	2240	3000	595	95.0	82.0	166.0	996	600	3669	60	180	16100
OAW3-800F2-10P	2500	3330	595	95.1	82.0	185.1	1111	600	4094	60	180	16800
OAW3-800F3-10P	2800	3730	595	95.2	82.0	207.1	1243	600	4586	60	180	17400
OAW3-900F1-10P	3150	4200	595	95.3	83.0	229.9	1380	600	5159	60	180	21000
OAW3-900F2-10P	3550	4760	595	95.4	83.0	258.9	1553	600	5814	60	180	21900
OAW3-900F3-10P	4000	5330	595	95.5	83.0	291.4	1748	600	6551	60	180	22700
OAW3-710F1-12P	1250	1670	495	94.2	78.0	98.2	589	600	2461	60	180	11700
OAW3-710F2-12P	1400	1870	495	94.3	78.0	109.9	659	600	2756	60	180	12200
OAW3-710F3-12P	1600	2130	495	94.4	79.0	123.9	743	600	3150	60	180	12600
OAW3-800F1-12P	1800	2400	495	94.5	79.0	139.2	835	600	3544	60	180	15700
OAW3-800F1-12P	2000	2670	495	94.6	79.0	154.5	927	600	3937	60	180	16300
OAW3-800F2-12P	2240	3000	495	94.7	79.0	172.9	1037	600	4410	60	180	16900
OAW3-900F1-12P	2500	3330	495	94.8	80.0	190.3	1142	600	4922	60	180	20600
OAW3-900F2-12P	2800	3730	495	94.9	80.0	212.9	1278	600	5512	60	180	21400
OAW3-900F3-12P	3150	4200	495	95.0	80.0	239.3	1436	600	6201	60	180	22200
OAW3-900F4-12P	3550	4760	495	95.1	80.0	269.4	1616	600	6989	60	180	23000
OAW3-710F1-16P	710	950	370	93.3	73.0	60.2	391	650	1870	60	180	11000
OAW3-710F2-16P	800	1070	370	93.4	73.0	67.7	440	650	2107	60	180	11400
OAW3-710F3-16P	900	1200	370	93.5	73.0	76.1	495	650	2370	60	180	11900
OAW3-710F4-16P	1000	1330	370	93.6	74.0	83.4	542	650	2634	60	180	12300
OAW3-800F1-16P	1120	1490	370	93.7	74.0	93.3	606	650	2950	60	180	15700
OAW3-800F2-16P	1250	1670	370	93.8	74.0	104.0	676	650	3292	60	180	16300
OAW3-800F3-16P	1400	1870	370	93.9	74.0	116.3	756	650	3687	60	180	16900
OAW3-900F1-16P	1600	2130	370	94.0	75.0	131.0	852	650	4214	60	180	19300
OAW3-900F2-16P	1800	2400	370	94.1	75.0	147.3	957	650	4741	60	180	20100
OAW3-900F3-16P	2000	2670	370	94.2	75.0	163.4	1062	650	5268	60	180	20900
OAW3-900F4-16P	2240	3000	370	94.3	75.0	182.9	1189	650	5900	60	180	21700

OAW3系列大型空-水冷高压(10kV)三相异步电动机(IC81W)

OAW3 SERIES LARGE SIZE AIR-WATER COOLING HIGH VOLTAGE 10kV) THREE-PHASE INDUCTION MOTORS (IC81W)

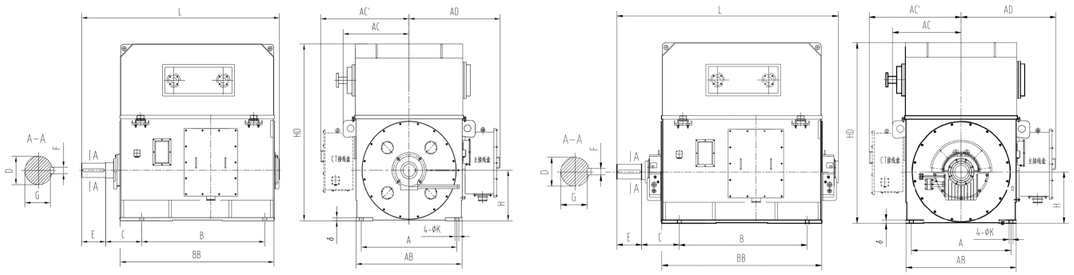

机座号 Frame	安装尺寸 Installation Dimensions																	
	A		B		C		D		E		F		G		H		K	
OAW3-710	1400	+2.8 -2.8	1800	2.8 -2.8	530	4 -4	200	0.046 0.017	350	0.65 -0.65	45	0 -0.062	185	0 -0.3	710	0 -1	56	0.062 0
OAW3-800	1600	+2.8 -2.8	2000	2.8 -2.8	530	4 -4	220	0.046 0.017	350	0.65 -0.65	50	0 -0.062	231	0 -0.3	800	0 -1	56	0.062 0
OAW3-900	1800	+3.5 -3.5	2240	3.5 -3.5	600	4 -4	250	0.046 0.017	410	0.77 -0.77	56	0 -0.074	230	0 -0.3	900	0 -1	66	0.062 0

机座号 Frame	极 数 unting Dim	外形尺寸 Outline Dimensions								图号	轴承 Bearing	
		AC	AC'	AD	AB	BB	δ	HD	L		轴伸端 DE	非轴伸端 NDE
OAW3-710	4P 6-16P	1000	1350	1380	1600	2250	45	2600	3130 2900	1 2	18-180B NU1044+6044	18-180BJ NU1044
OAW3-800	4P 6-16P	1140	1470	1500	1800	2300	50	2900	3220	1 1	22-225B 22-225B	22-225BJ 22-225BJ
OAW3-900	4P 6-16P	1280	1620	1650	2050	2500	55	3300	3600	1 1	22-250B 22-250B	22-250BJ 22-250BJ


风能 | Wind Energy


水处理 | Water Treatment


轨道交通 | Rail Transit


矿山 | Mine


纺织机械 | Textile Machinery


造纸 | Paper Making

行业应用
INDUSTRY APPLICATION


制冷 | Refrigeration


冶金 | Metallurgy


印染 | Textile Printing


造船 | Shipbuilding

网点分布
NETWORK DISTRIBUTION

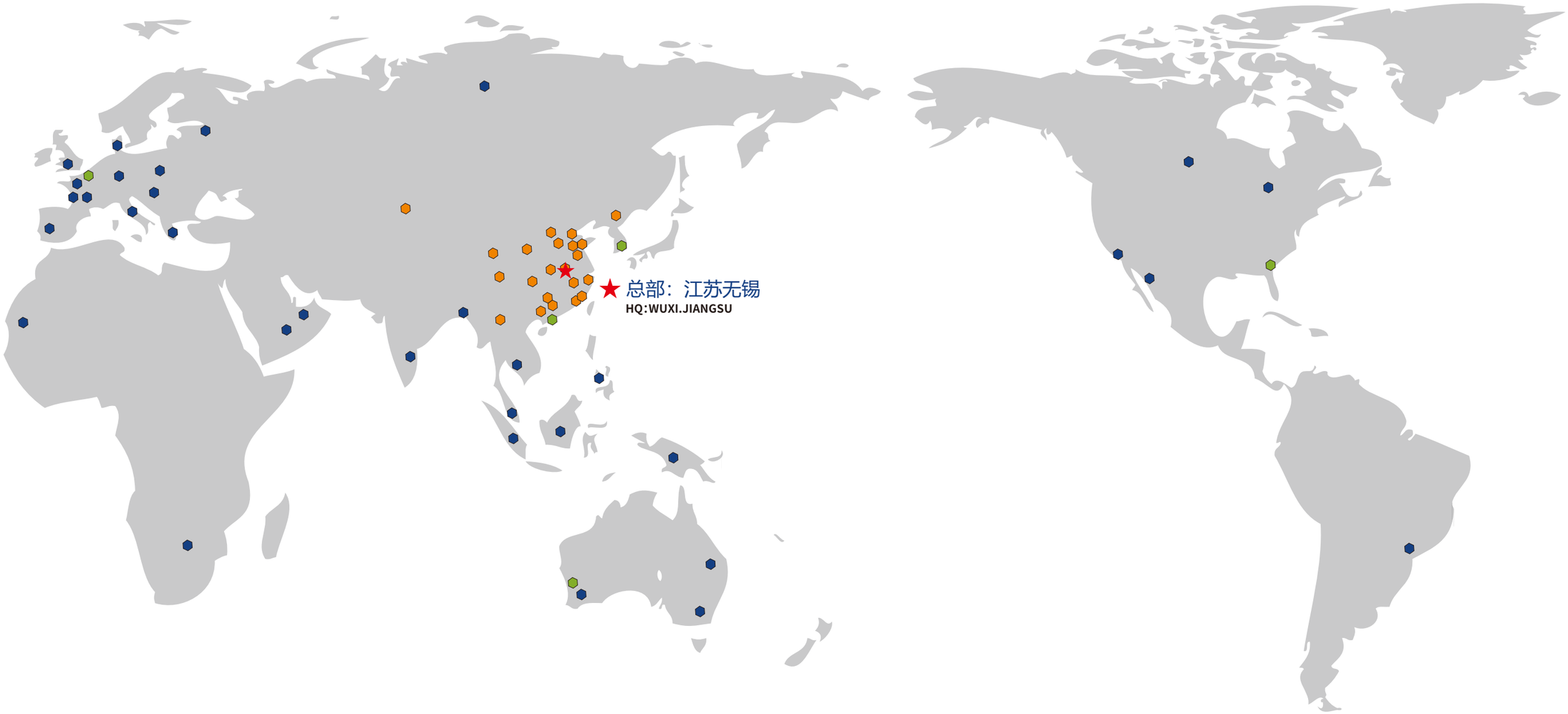

办事处 Sales office

北京、上海、广州、深圳、天津、重庆、南京、杭州、合肥、青岛、石家庄、沈阳、济南、泉州、长沙、郑州、西安、台州、昆明、烟台、佛山、乌鲁木齐

销售公司 Sales company

OMEC,Netherlands、OMEC,Korea、OMEC,North America、OMEC,HongKong、OMEC,Australia (EMT OMEC PTY LTD.)

经销商 Distributor

韩国(Korea)、泰国（Thailand)、新加坡(Singapore)、马来西亚(Malaysia)、菲律宾(Philippines)、印度(India)、巴西(Brazil)
俄罗斯(Russia)、迪拜(Dubai)、沙特(SaudiArabia)、南非(South Africa)、摩纳哥(Monaco)、希腊(Greece)、意大利(Italy)、波兰(Poland)
美国(America)、加拿大(Canada)、英国(UK)、法国(France)、德国(Germany)、丹麦(Denmark)、比利时(Belgium)、西班牙(Spain)、葡萄牙(Portugal)